INVENTORY OF LIGHTS -CIRCUIT # 1							
Project Number	Met Ed Pole No.	Approx. Street No.	Street Name	Pole Height Ft.	Pole Work Description	Luminaire Description	Foundation Description
1	50139-36699	1209	Parkside Drive South	12'-0"	Refurbish	New LED	New
2	50118-36721	1220	Parkside Drive South	12'-0"	Refurbish	New LED	New
3	50070-36717	1228	Parkside Drive South	12'-0"	New	New LED	New
4	50039-36713	1230	Parkside Drive South	12'-0"	Refurbish	New LED	New
5	50028-36694	1230	Parkside Drive South	12'-0"	New	New LED	New
6	50004-36652	1232	Parkside Drive South	12'-0"	New	New LED	New
7	50008-36659	1101	Evergreen Road	12'-0"	New	New LED	New
8	50019-36640	1050	Evergreen Road	12'-0"	Refurbish	New LED	New
9	50011-36619	999	Evergreen Road	12'-0"	New	New LED	New
10	50018-36598	900	Evergreen Road	12'-0"	Refurbish	New LED	New
11	50019-36585	859	Evergreen Road	12'-0"	Refurbish	New LED	New
12	50114-36655	1203	Orchard Road	12'-0"	Refurbish	New LED	New
13	50102-36648	1207	Orchard Road	10'-0"	Refurbish	New LED	New
14	50063-36659	1217	Orchard Road	10'-0"	Refurbish	New LED	New
15	49995-36641	1302	Orchard Road	12'-0"	Refurbish	New LED	New
16	49965-36617	1306	Orchard Road	12'-0"	Refurbish	New LED	New
17	49934-36611	1394	Orchard Road	12'-0"	Refurbish	New LED	New
18	49951-36601	1069	Barberry Road	10'-0"	Refurbish	New LED	New
19	49955-36577	1030	Barberry Road	12'-0"	Refurbish	New LED	New
20	49971-36557	1005	Barberry Road	12'-0"	New	New LED	New
21	49978-36585	1309	Garden Lane	12'-0"	Refurbish	New LED	New
22	49989-36595	1305	Garden Lane	10'-0"	Refurbish	New LED	New
23	49941-36533	1404	Old Wyomissing Road	10'-0"	Refurbish	New LED	New
24	49916-36530	1285	Old Wyomissing Road	12'-0"	Refurbish	New LED	New
25	50041-36578	1285	Museum Road	12'-0"	New	New LED	New
27	50000-36552	1321	Museum Road	10'-0"	Refurbish	New LED	New
30	49935-36496	1430	Museum Road	12'-0"	New	New LED	New
30A	49951-36517	1440	Museum Road	12'-0"	New	New LED	New

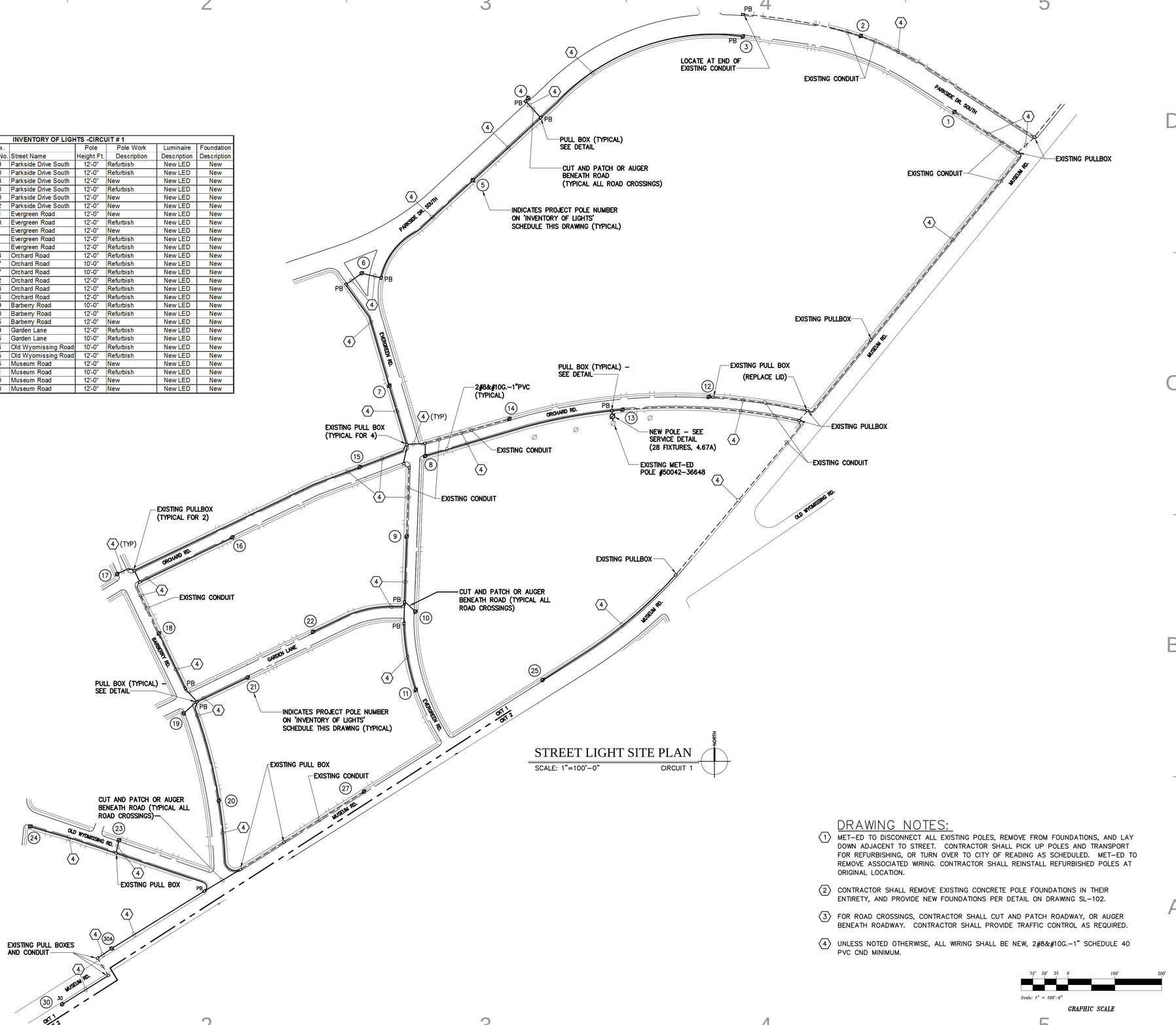

STREET LIGHT SITE PLAN

SCALE: 1"=100'-0" CIRCUIT 1

DRAWING NOTES:

1. MET-ED TO DISCONNECT ALL EXISTING POLES, REMOVE FROM FOUNDATIONS, AND LAY DOWN ADJACENT TO STREET. CONTRACTOR SHALL PICK UP POLES AND TRANSPORT FOR REFURBISHING, OR TURN OVER TO CITY OF READING AS SCHEDULED. MET-ED TO REMOVE ASSOCIATED WIRING. CONTRACTOR SHALL REINSTALL REFURBISHED POLES AT ORIGINAL LOCATION.
2. CONTRACTOR SHALL REMOVE EXISTING CONCRETE POLE FOUNDATIONS IN THEIR ENTIRETY, AND PROVIDE NEW FOUNDATIONS PER DETAIL ON DRAWING SL-102.
3. FOR ROAD CROSSINGS, CONTRACTOR SHALL CUT AND PATCH ROADWAY, OR AUGER BENEATH ROADWAY. CONTRACTOR SHALL PROVIDE TRAFFIC CONTROL AS REQUIRED.
4. UNLESS NOTED OTHERWISE, ALL WIRING SHALL BE NEW, 2#8&#10G.–1" SCHEDULE 40 PVC CND MINIMUM.

75' 50' 25 0 100' 200'

Scale: 1" = 100'-0"

GRAPHIC SCALE

ENGINEER:

ECON OPPORTUNITIES, INC.

230 N 5TH ST
READING, PA 19601-3309
610-898-0252

CONSULTANTS

CITY OF READING STREET LIGHTS WYOMISSING PARK

MARK	DATE	DESCRIPTION

PROJECT NO:
MODEL FILE:
DRAWN BY: TK
CHK'D BY: SG
COPYRIGHT

SHEET TITLE

STREETLIGHTS PLAN

5-30-2014

SL-100

INVENTORY OF LIGHTS -CIRCUIT # 2							
Project Number	Met Ed Pole No.	Approx. Street No.	Street Name	Pole Height Ft.	Pole Work Description	Luminaire Description	Foundation Description
26	50036-36585	1302	Museum Road	10'-0"	Refurbish	New LED	New
28	49988-36537	1347	Museum Road	12'-0"	Refurbish	New LED	New
29	49965-36532	1404	Museum Road	12'-0"	Refurbish	New LED	New
31	50052-36528	1336	East Wyomissing Blvd	12'-0"	New	New LED	New
32	50048-36518	1490	East Wyomissing Blvd	10'-0"	New	New LED	New
33	50014-36515	1515	East Wyomissing Blvd	10'-0"	Refurbish	New LED	New
34	50010-36524	1536	East Wyomissing Blvd	10'-0"	Refurbish	New LED	New
35	49988-36520	1566	East Wyomissing Blvd	10'-0"	Refurbish	New LED	New
36	50004-36500	1409	Rose Virginia Road	12'-0"	Refurbish	New LED	New
37	49966-36484	1450	Rose Virginia Road	10'-0"	Refurbish	New LED	New
38	49957-36465	1484	Rose Virginia Road	10'-0"	Refurbish	New LED	New
39	50062-36509	1303	Farr Road	10'-0"	Refurbish	New LED	New
40	50055-36488	1307	Farr Road	12'-0"	Refurbish	New LED	New
41	50057-36464	1319	Farr Road	12'-0"	Refurbish	New LED	New
42	50039-36453	1420	Farr Road	10'-0"	Refurbish	New LED	New
43	50029-36429	1453	Farr Road	12'-0"	Refurbish	New LED	New
44	50009-36419	1462	Farr Road	10'-0"	Refurbish	New LED	New
45	50008-36403	1486	Farr Road	12'-0"	Refurbish	New LED	New
46	49957-36465	1514	Farr Road	12'-0"	Refurbish	New LED	New
47	49992-36433	807	Farr Place	12'-0"	Refurbish	New LED	New
48	49994-36461	815	Farr Place	12'-0"	Refurbish	New LED	New
49	50022-36477	825	Farr Place	12'-0"	Refurbish	New LED	New

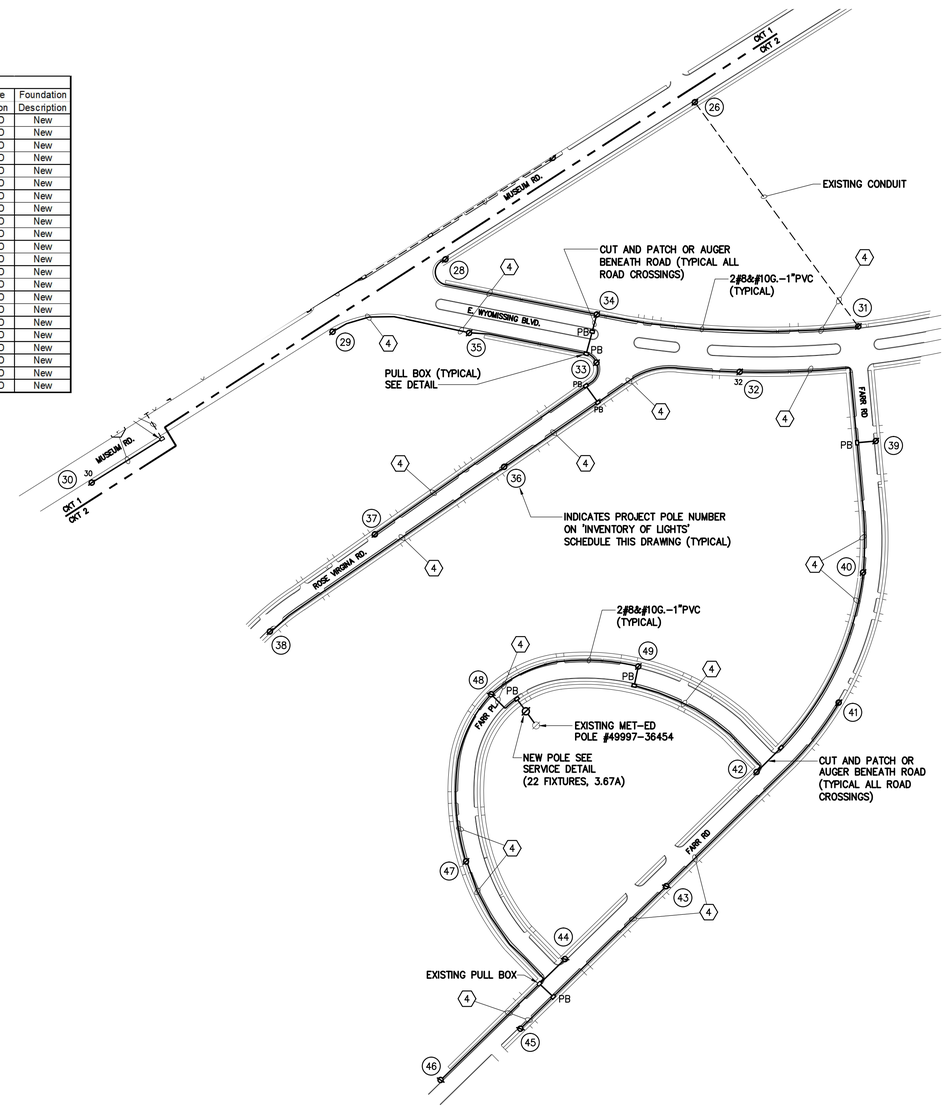

STREET LIGHT SITE PLAN

SCALE: 1"=100'-0" CIRCUIT 2

NORTH

DRAWING NOTES:

1. MET-ED TO DISCONNECT ALL EXISTING POLES, REMOVE FROM FOUNDATIONS, AND LAY DOWN ADJACENT TO STREET. CONTRACTOR SHALL PICK UP POLES AND TRANSPORT FOR REFURBISHING, OR TURN OVER TO CITY OF READING AS SCHEDULED. MET-ED TO REMOVE ASSOCIATED WIRING. CONTRACTOR SHALL REINSTALL REFURBISHED POLES AT ORIGINAL LOCATION.
2. CONTRACTOR SHALL REMOVE EXISTING CONCRETE POLE FOUNDATIONS IN THEIR ENTIRETY, AND PROVIDE NEW FOUNDATIONS PER DETAIL ON DRAWING SL-102.
3. FOR ROAD CROSSINGS, CONTRACTOR SHALL CUT AND PATCH ROADWAY, OR AUGER BENEATH ROADWAY. CONTRACTOR SHALL PROVIDE TRAFFIC CONTROL AS REQUIRED.
4. UNLESS NOTED OTHERWISE, ALL WIRING SHALL BE NEW, 2#8&#10G.-1" SCHEDULE 40 PVC CND MINIMUM.

75' 50' 25' 0 100' 200'

Scale: 1" = 100'-0"

GRAPHIC SCALE

ENGINEER:

ECON OPPORTUNITIES, INC.

230 N 5TH ST
READING, PA 19601-3309
610-898-0252

CONSULTANTS

CITY OF READING STREET LIGHTS WYOMISSING PARK

MARK	DATE	DESCRIPTION

PROJECT NO:	
MODEL FILE:	
DRAWN BY:	TK
CHK'D BY:	SG
COPYRIGHT	

SHEET TITLE

STREETLIGHTS PLAN

5-30-2014

SL-101

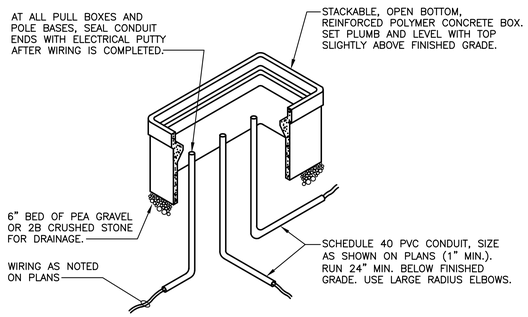

IN GRADE PULLBOX DETAIL

NOT TO SCALE

NOTES:

1. CONDUITS NOT TERMINATING IN OR AT PULL BOXES NEED NOT RUN THROUGH PULL BOXES UNLESS REQUIRED TO MAINTAIN NEC PULLING DISTANCES.
2. PROVIDE TIER 22 GASKETED BOX W/ HEAVY DUTY BOLTED, GASKETED COVER LABELED 'ELECTRIC'. QUAZITE 'PG' STYLE OR EQUAL. BOX SIZE AS NOTED ON PLANS. PROVIDE BOX EXTENSIONS AS REQUIRED.

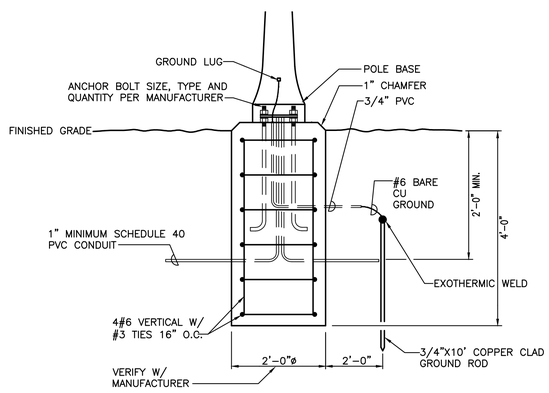

POLE BASE DETAIL

NOT TO SCALE

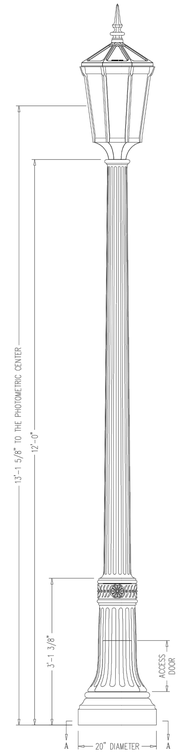

LIGHTING POLE DETAIL

NOT TO SCALE

DETAIL REPRESENTS BASIS OF DESIGN MANUFACTURER (SPRING CITY). ALTERNATE MANUFACTURERS WILL BE CONSIDERED, SUBJECT TO CONFORMANCE WITH DRAWINGS AND SPECIFICATIONS

LUMINAIRE SPECIFICATIONS:

STYLE:	SAVANNAH
HEIGHT:	3'-3 5/8"
WIDTH:	1'-7 1/4" OCTAGONAL
MATERIAL:	CAST ALUMINUM ALLOY ANSI 356 PER A.S.T.M. B26-95
FINISH:	POWDER COAT - HUNTER GREEN
LAMPING:	80 WATT LED
VOLTAGE:	ELECTRONIC WIRED AT 120-277 VOLTS
NUM. OF BOARDS:	2
COLOR TEMP:	4000K (MEDIUM WHITE)
DISTRIBUTION:	TYPE III (ASYMMETRIC)
OPTICS:	CROSSFIRE REFRACTIVE
PANELS:	PEBBLED ACRYLIC
CATALOG NO.	ALMSVH-LE080/EVX/X2-40-CR3-YPBP-FSA-CU

LAMP POST SPECIFICATIONS:

STYLE:	NORTHAMPTON
HEIGHT:	12'-0"
PHOTOMETRIC CENTER:	13'-1 5/8"
BASE:	20" DIAMETER
MATERIAL:	CAST DUCTILE IRON PER A536-84 GRADE 65-45-12
FINISH:	POWDER COAT - HUNTER GREEN
ACCESS DOOR:	LOCATED IN BASE SECURED WITH TAMPER PROOF HEX SOCKET SECURITY MACHINE SCREWS
GROUND STUD PROVISIONS:	DRILL AND TAP INSIDE WALL OF BASE OPPOSITE ACCESS DOOR TO ACCOMMODATE A 1/4"-20 GROUND STUD (STUD SUPPLIED BY OTHERS)
ANCHOR BOLTS:	(4) 3/4" DIA. X 24" LONG + 3" HOOK (FULLY GALVANIZED WITH 1 NUT AND 1 WASHER PER BOLT)
BOLT PROJECTION:	3" REQUIRED
TENON:	3 1/2" DIA. X 3" HIGH (TO ACCEPT LUMINAIRE)
CATALOG NO.	DPSNRT-20-12.00-TN3.50/3.00-323/1NW-CU

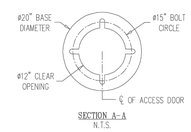

SECTION A-A
N.T.S.

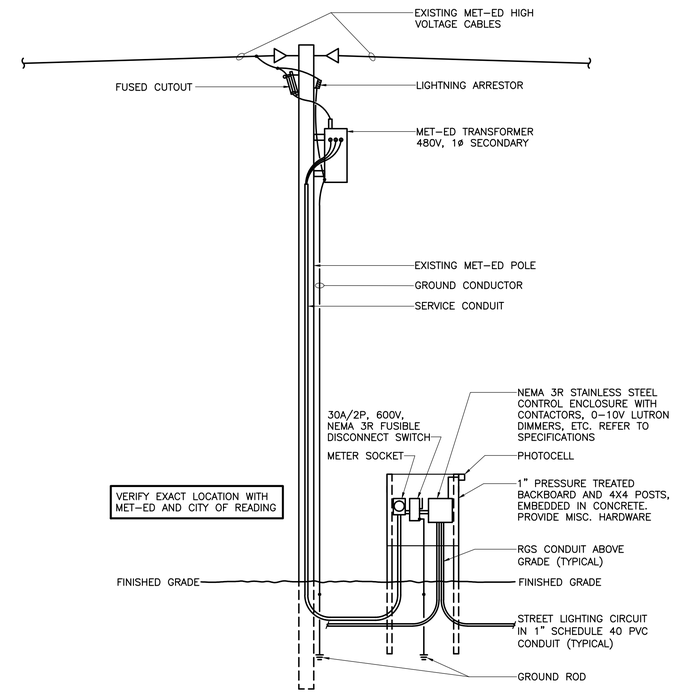

SITE LIGHTING SERVICE DETAIL

NOT TO SCALE

ELECTRICAL GENERAL NOTES

THE FOLLOWING NOTES APPLY TO ALL DRAWINGS:

1. ENTIRE INSTALLATION INCLUDING MATERIALS, EQUIPMENT AND WORKMANSHIP, SHALL CONFORM WITH THE LATEST ADDITION OF THE NATIONAL ELECTRIC CODE, WITH ALL APPLICABLE LAWS, CODES AND REGULATIONS AND REGULATORY BODIES HAVING JURISDICTION OVER THIS WORK.
2. UNLESS OTHERWISE NOTED ALL OUTDOOR ELECTRICAL EQUIPMENT SHALL BE PROVIDED WITH, AND HOUSED IN A NEMA 3R ENCLOSURE.
3. THE CONTRACTOR SHALL VERIFY ALL DIMENSIONS AND CONDITIONS AT THE SITE BEFORE PROCEEDING WITH THE WORK.
4. ALL BRANCH WIRING SHALL BE MINIMUM 2 #8 & 1 #10 GROUND. MINIMUM CONDUIT SIZE SHALL BE 1" SCHEDULE 40 PVC. USE RIGID GALVANIZED STEEL CONDUIT WHERE CONDUIT IS RUN EXPOSED ABOVE GRADE.
5. THE CONTRACTOR SHALL VISIT THE SITE AND BECOME FAMILIAR WITH ALL CONDITIONS AND SYSTEMS THAT EFFECT HIS BIDDING AND WORK, AND SHALL PROVIDE VALUE FOR THE SAME IN HIS BID.
6. THE CONTRACTOR SHALL CONFIRM THE LOCATIONS OF ALL UTILITIES. THE CONTRACTOR IS RESPONSIBLE FOR REPAIRING ANY DAMAGE TO EXISTING UTILITIES. VERIFY WITH PA-1-CALL BEFORE ANY DIGGING. E.C. IS RESPONSIBLE FOR ALL SAW CUTTING, EXCAVATION, BACKFILLING AND RESTORATION, AND AUGERING REQUIRED TO PERFORM HIS WORK.
7. IT IS THE RESPONSIBILITY OF THE CONTRACTOR TO VERIFY FIELD CONDITIONS AT THE SITE AND NOTIFY THE OWNER OF ANY DISCREPANCIES PRIOR TO COMMENCING WITH THE WORK.
8. THE ELECTRICAL CONTRACTOR SHALL PERFORM ALL CUTTING AND PATCHING OF EXISTING CONSTRUCTION REQUIRED BY HIS WORK. ALL FINISHES SHALL MATCH EXISTING, WHETHER CONCRETE, BLACKTOP, OR GRASS. WHERE EQUIPMENT IS REMOVED, CONTRACTOR SHALL PATCH AND REFINISH AREA TO MATCH EXISTING. REPAIRED BLACKTOP AREAS SHALL BE HOT PATCHED AND SEALED. GRASS AREAS SHALL BE DRESSED WITH TOPSOIL AND SEEDED.
9. THE ELECTRICAL CONTRACTOR SHALL EFFECTIVELY PROTECT ALL MATERIALS AND EQUIPMENT FROM ENVIRONMENTAL AND PHYSICAL DAMAGE UNTIL FINAL ACCEPTANCE. CLOSE AND PROTECT ALL OPENINGS DURING CONSTRUCTION. PROVIDE NEW MATERIALS AND EQUIPMENT TO REPLACE ITEMS DAMAGED.
10. EXISTING ELECTRICAL EQUIPMENT THAT INTERFERES WITH THE NEW ARRANGEMENT SHALL BE REMOVED, REINSTALLED, RELOCATED, REROUTED, EXTENDED OR ABANDONED AS REQUIRED, TO SUIT THE NEW ARRANGEMENT.
11. SHOULD REMOVAL, RELOCATION, REROUTING OF ANOTHER TRADE'S WORK BE REQUIRED TO ACCOMMODATE ELECTRICAL WORK, THE ELECTRICAL CONTRACTOR SHALL BE RESPONSIBLE FOR THAT WORK AND SHALL PAY ALL REQUIRED COSTS. WORK SHALL BE PERFORMED BY MECHANICS SKILLED IN THE PARTICULAR TRADE INVOLVED.
12. EXISTING LANDSCAPE AND HARD SURFACES DAMAGED SHALL BE RESTORED TO THEIR ORIGINAL CONDITION OR REPLACED.
13. EXISTING ELECTRICAL WORK THAT IS TO REMAIN WHEN OTHER ELECTRICAL WORK IS TO BE MODIFIED OR REMOVED SHALL BE MAINTAINED ON A PERMANENT BASIS.
14. ELECTRICAL CONTRACTOR SHALL BE RESPONSIBLE FOR MAINTAINING INTEGRITY OF ALL STRUCTURAL ELEMENTS.
15. DIVISION 26 OR EC SHALL USED INTERCHANGEABLY AND SHALL INDICATE WORK INCLUDED UNDER THE ELECTRICAL CONTRACTORS SCOPE.
16. ALL EQUIPMENT REMOVED SHALL BE TURNED OVER TO OWNER NO LONGER REQUIRED. ALL MATERIALS NOT DESIRED BY OWNER SHALL BE REMOVED FROM SITE.
17. CONTRACTOR SHALL COORDINATE ALL DEMOLITION WORK WITH PHASING PLAN, OWNERS REPRESENTATIVE, AND OTHER TRADES.

ENGINEER:

ECON OPPORTUNITIES, INC.

230 N 5TH ST
READING, PA 19601-3309
610-898-0252

CONSULTANTS

CITY OF READING STREET LIGHTS WYOMISSING PARK

MARK	DATE	DESCRIPTION

PROJECT NO:	
MODEL FILE:	
DRAWN BY:	TK
CHK'D BY:	SG

COPYRIGHT

SHEET TITLE

STREETLIGHTS DETAILS

5-30-2014

SL-102