Renovations to Recycling Center Baler Facility for

The City of Reading

Hill Road
Reading, Berks County, PA

DESIGN TEAM

ARCHITECT:

Olsen Design Group Architects

2345 Bernville Road
Reading, PA 19605
610-371-9606 (FAX) 610-371-9607

STRUCTURAL ENGINEER:

Multani Associates

955 Penn Avenue
Wyomissing, PA 19610
610-374-0821 (FAX) 610-374-7071

ELECTRICAL ENGINEER:

Wanko+Mitten Energy Systems

508 Chestnut Street
Hamburg, PA 19526
610-914-1980 (FAX)

ABBREVIATIONS

A	
@	AT
&	AND
A.B.	ANCHOR BOLT
A.F.F.	ABOVE FINISHED FLOOR
A.I.B.	AIR INFILTRATION BARRIER
ALUM.	ALUMINUM
ANOD.	ANODIZE
APPROX.	APPROXIMATE
APVD.	APPROVED
A.T.C.	ACOUSTIC TILE CEILING
B	
BITUM.	BITUMINOUS
BLDG.	BUILDING
BLKG.	BLOCKING
BM.	BEAM
B.M.	BENCH MARK
B.O.	BOTTOM OF
C	
CAB.	CABINET
C.B.	CATCH BASIN
C.D.	CEILING DIFFUSER
CEM.	CEMENT
C. FLSHG.	COUNTER FLASHING
C.G.	CORNER GUARD
C.H.	CEILING HEIGHT
C.J.	CONTROL JOINT
C.L.	CENTER LINE
CLG.	CEILING
CLR.	CLEAR
COL.	COLUMN
CPT.	CARPET
CONC.	CONCRETE
CONT.	CONTINUOUS
CRNR.	CORNER
C.T.	CERAMIC TILE
C.W.	CURTAIN WALL
D	
D.	DEPTH
DBL.	DOUBLE
DET.	DETAIL
DIA.	DIAMETER
DIM.	DIMENSION
DIV.	DIVISION
DR.	DOOR
DWG.	DRAWING
E	
E.C.	ELECTRICAL CONTRACTOR
E. FLSH	ELASTOMERIC FLASHING
E.J.	EXPANSION JOINT
EL.	ELEVATION
ELEC.	ELECTRIC
EQ.	EQUAL
EQUIP.	EQUIPMENT
E.S.	EXPOSED STRUCTURE
E.W.	EACH WAY
E.W.C.	ELECTRIC WATER COOLER
EXH.	EXHAUST
EXIST.	EXISTING
EXT.	EXTERIOR
F	
F.A.	FIRE ALARM
F.D.	FLOOR DRAIN
F.E.	FIRE EXTINGUISHER
F.F.	FINISHED FLOOR
F.H.C.	FIRE HOSE CABINET
FIN.	FINISH
FLSH.	FLASHING
F.O.	FACE OF
FT.	FOOT
G	
GALV.	GALVANIZED
G.C.	GENERAL CONTRACTOR
GL.	GLASS
GLZD.	GLAZED
GRD.	GROUND
G.W.B.	GYPSUM WALL BOARD
H	
H.	HIGH
HDW.	HARDWARE
H.M.	HOLLOW METAL
HORIZ.	HORIZONTAL
H.P.	HIGH POINT
HT.	HEIGHT
I	
I.D.	INSIDE DIAMETER
I.M.P.	INSULATED METAL PANEL
ILLUM.	ILLUMINATED
INCAND.	INCANDESCENT
INFO.	INFORMATION
INSUL.	INSULATED
INT.	INTERIOR
J	
JT.	JOINT
L	
LAM.	LAMINATE
LBL.	LABEL
LNTL.	LINTEL
L.P.	LOW POINT
LTG.	
M	
MAS.	MASONRY
MAX.	MAXIMUM
MECH.	MECHANICAL
M.G.S.	METAL GRAVEL STOP
MH.	MANHOLE
MIN.	MINIMUM
MISC.	MISCELLANEOUS
MTD.	MOUNTED
MTL.	METAL
N	
N.	NORTH
N.I.C.	NOT IN CONTRACT
NO.	NUMBER
N.T.S.	NOT TO SCALE
O	
O.C.	ON CENTER
O.D.	OUTSIDE DIAMETER
O.H.	OPPOSITE HAND
OPP.	OPPOSITE
OPNG.	OPENING
P	
P.I.P.	POURED IN PLACE
P. LAM.	PLASTIC LAMINATE
PLUMB.	PLUMBING
PNL.	PANEL
PR.	PAIR
PRCST.	PRECAST
PROJ.	PROJECT
P.T.	PRESSURE TREATED
PTD.	PAINTED
Q	
Q.C.	QUALITY CONTROL
QTY.	QUANTITY
R	
R.	RISER
RAD.	RADIUS
R.C.P.	REFLECTED CEILING PLAN
RCPT.	RECEPTACLE
R.D.	ROOF DRAIN
REF.	REFERENCE
REINF.	REINFORCE
REM.	REMOVABLE
REQ.	REQUIRE
RESIL.	RESILIENT
REV.	REVISION
RFG.	ROOFING
R.O.	ROUGH OPENING
R.W.C.	RAIN WATER CONDUCTOR
S	
S.	SOUTH
SCHED.	SCHEDULE
S.F.	SQUARE FOOT
S.H.	SOFFIT HEIGHT
SIM.	SIMILAR
SPECS.	SPECIFICATIONS
SQ.	SQUARE
S.S.	STAINLESS STEEL
STL.	STEEL
S.V.T.	SOLID VINYL TILE
STN.	STONE
STOR.	STORAGE
STRUCT.	STRUCTURE
S.W.C.	SHEET WALL COVERING
T	
TEL.	TELEPHONE
TEMP.	TEMPORARY
T.O.S.	TOP OF STEEL
TYP.	TYPICAL
U	
U.O.N.	UNLESS OTHERWISE NOTED
V	
V.B.	VAPOR BARRIER
V.C.T.	VINYL COMPOSITION TILE
VERT.	VERTICAL
VEST.	VESTIBULE
VIN.	VINYL
V.I.F.	VERIFY IN FIELD
W	
W.	WIDE or WEST
W. BLKG.	WOOD BLOCKING
WD.	WOOD
WK.	WORK
W/	WITH
W/O	WITHOUT
W.O.	WINDOW OPENING
WP.	WATERPROOF
W.R.	WATER RESISTANT
WTHP.	WEATHERPROOF

GRAPHIC SYMBOL LEGEND

- 1-Hr. Fire Rating
- 2-Hr. Fire Rating
- 3-Hr. Fire Rating
- 4-Hr. Fire Rating
- Smoke Rating
- Column Line Identifier
- Detail Identifier
- Door Identifier
- Room Identifier
- Elevation Symbol
- Test Bore Symbol
- Exterior Elevation Identifier
- Interior Elevation Identifier
- Building or Wall Section Identifier
- Reflected Ceiling Room Identifier
- Glazing Identifier
- Revision Cloud
- Revision Symbol
- Wall Type Identifier

SITE LOCATION PLAN

CONTACT PERSON(s)

Lee C. Olsen, AIA, NCARB, Principal - In - Charge
Scott W. Weber, Project Manager

Olsen Design Group Architects
2345 Bernville Road
Reading, Pennsylvania 19605

PHONE : 610 - 371 - 9606
FAX : 610 - 371 - 9607
E-Mail: lsmith@odgarchitects.com

ISSUE DATES

CLIENT 30% REVIEW :	N/A
CLIENT 60% REVIEW :	6/18/2014
CLIENT 90% REVIEW :	7/2/2014
ISSUED FOR ACCESSIBILITY PLAN REVIEW :	7/8/2014
ISSUED FOR CODE REVIEW :	7/8/2014
ISSUED FOR BIDDING :	7/8/2014
ISSUED FOR PERMITS :	
ISSUED FOR CONSTRUCTION :	

BUILDING CODE REVIEW

REFERENCE CODE: 2009 INTERNATIONAL BUILDING CODE

☐ NEW CONSTRUCTION ■ RENOVATIONS TO EXISTING BUILDING ☐ ADDITION(S) ☐ ALTERATION(S)

PROPOSED USE: RECYCLING CENTER FOR BALER FACILITY

OWNER / CONTACT PERSON: THE CITY OF READING
RECYCLING / SOLID WASTE
FRANK B. DENBOWSKI, DIVISION MANAGER
PHONE: 610-655-6049

CODE ENFORCEMENT JURISDICTION: ■ LOCAL ☐ STATE

LEAD DESIGN PROFESSIONAL:

DISCIPLINE:	NAME:	LICENSE #:
ARCHITECTURAL	Lee C. Olsen, AIA, NCARB	0088452-X
ELECTRICAL	BENJAMIN MITTEN, P.E., LEED AP,	PE078291

USE & OCCUPANCY CLASSIFICATION:

S-1 STORAGE MODERATE HAZARD

BUILDING DATA:

CONSTRUCTION TYPE: V - B

BUILDING HEIGHT AND AREA

MAX. HEIGHT: 1 STORY
MAX. AREA: 9,000 SQ. FT.
ALLOWABLE INCREASE: N / A

AREA SUMMARY:

NUMBER OF STORIES/SQ. FT : ?? / ??

FLOOR	OVERALL FLOOR SQ. FT.	PROJECT SQ. FT.	PERCENT (%) OF FLOOR AFFECTED
MAIN LEVEL	3,426	979	28.6%

OCCUPANCY DATA:

SPACE:

BALER ROOM 979 SQ. FT. / 300 = 3.26
4 OCCUPANTS

REQUIRED EGRESS:

SPACE:

4 OCCUPANTS (.30) = 1.2" REQ'D / 34.25" PROVIDED

FIRE RESISTANCE RATING (HOURS) S-1 STORAGE

BUILDING ELEMENT	RATING	REFERENCE CODE SECTION/EXCEPTIONS TABLE 601	FIRE SEPARATION DISTANCE (FEET)
STRUCTURAL FRAME, COLUMNS, GIRDERS, & TRUSSES	0	--	--
BEARING WALLS			
EXTERIOR	0	--	--
INTERIOR	0	--	--
NONBEARING WALLS & PARTITIONS			
EXTERIOR	0	--	--
INTERIOR	0	--	--
FLR. CONST. SUPPORT BEAMS, & JOISTS	0	--	--
ROOF CONST. SUPPORT BEAMS, & JOISTS	0	--	--
SHAFT - EXIST	0	--	--
SHAFT - OTHER	0	--	--
CORRIDOR SEPARATION	N/A	--	--
OCCUPANCY SEPARATION	N/A	--	--
PARTY / FIREWALL SEPARATION	N/A	--	--
SMOKE BARRIER SEPARATION	N/A	--	--
TENANT SEPARATION	N/A	--	--

LIFE SAFETY SYSTEM REQUIREMENTS:

EMERGENCY LIGHTING:	☐ NO	■ YES	■ HAS BEEN PROVIDED	SECTION 1006.1.
FIRE ALARM:	■ NO	☐ YES	☐ HAS BEEN PROVIDED	SECTION 907.
SMOKE DETECTION SYSTEM:	■ NO	☐ YES	☐ HAS BEEN PROVIDED	SECTION 907.
PANIC HARDWARE:	■ NO	☐ YES	☐ HAS BEEN PROVIDED	SECTION 1008.1.10.
SPRINKLERS:	■ NO	☐ YES	☐ HAS BEEN PROVIDED	SECTION 903.2.9.
AREA OF REFUGE:	■ NO	☐ YES	☐ HAS BEEN PROVIDED	**TABLE 1016.1
EXIT SIGNS:	■ NO	☐ YES	☐ HAS BEEN PROVIDED	SECTION 1011.1.1.

NOTES:

- NO PUBLIC WATER OR SEWERAGE ON SITE.
- ** TABLE 1016.1 EXIT ACCESS TRAVEL DISTANCE FOR S-1 STORAGE, WITHOUT SPRINKLER SYSTEM IS 200 FEET.

OWNER'S CONSTRUCTION DOCUMENT
FINAL REVIEW AND APPROVAL:

HAVING REVIEWED THE FOLLOWING DOCUMENTS, I HEREBY GIVE MY APPROVAL THE DRAWINGS AND SPECIFICATIONS CONTAINED WITHIN TO MOVE TO THE NEXT PHASE OF THIS PROJECT.

ANY CORRECTIONS TO THE DOCUMENT HAVE BEEN MARKED IN RED OR WILL BE SENT TO OLSEN DESIGN GROUP ARCHITECTS IN WRITING WITHIN THE NEXT FIVE (5) WORKING DAYS.

SIGNATURE: TITLE: DATE:

DRAWING INDEX

DRAWING #	TITLE
A-0.0	TITLE SHEET
ARCHITECTURAL:	
D-1.0	DEMOLITION PLAN
A-1.0	NEW WORK PLAN
A-4.0	SECTIONS & DETAILS
ELECTRICAL:	
E-0.01	ELECTRICAL INFORMATION SHEET
E-2.01	ELECTRICAL FLOOR PLAN POWER / LIGHTING
E-6.01	ELECTRICAL SCHEDULES AND SINGLE LINE DIAGRAM
E-8.01	ELECTRICAL DETAILS
E-9.01	ELECTRICAL SPECIFICATIONS

OLSEN**DESIGN**GROUP
ARCHITECTS

 # 14019
Renovation to Recycling Center Baler Facility for
The City of Reading

DEMOLITION NOTES:

1. REMOVE EXISTING CONCRETE FLOOR SLAB AND EARTH TO RECEIVE NEW 6" CONCRETE SLAB.
2. REMOVE EXISTING ASPHALT PAVING AND EARTH TO RECEIVE NEW 6" CONCRETE SLAB.
3. REMOVE EXISTING EARTH TO RECEIVE NEW 6" CONCRETE SLAB.
4. PROVIDE TRENCH FOR NEW ELECTICAL SERVICE FROM HILL ROAD +/- 521' AWAY.
5. REMOVE EXISTING DOOR AND DOOR FRAME.
6. REMOVE EXISTING OVERHEAD GARAGE DOOR, TRACK AND FRAME.
7. PROVIDE NEW 3'-4"W x 7'-4"H M.O. FOR NEW DOOR FRAME (CUT OUT EXISTING C.M.U. FOR INSTALLATION OF NEW LINTEL).
8. REMOVE EXISTING CONCRETE COLUMN.

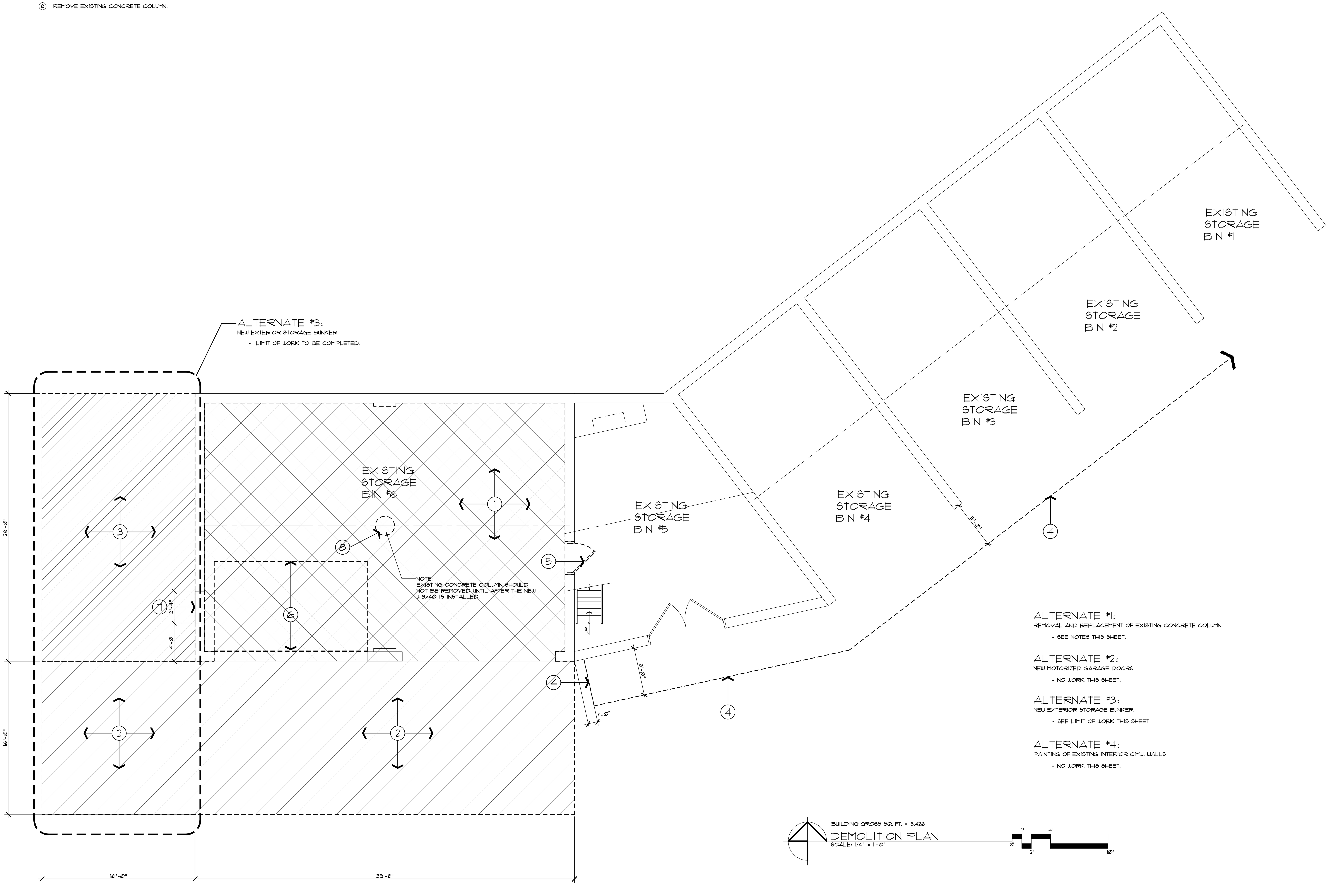

ALTERNATE #1:
REMOVAL AND REPLACEMENT OF EXISTING CONCRETE COLUMN
- SEE NOTES THIS SHEET.

ALTERNATE #2:
NEW MOTORIZED GARAGE DOORS
- NO WORK THIS SHEET.

ALTERNATE #3:
NEW EXTERIOR STORAGE BUNKER
- SEE LIMIT OF WORK THIS SHEET.

ALTERNATE #4:
PAINTING OF EXISTING INTERIOR C.M.U. WALLS
- NO WORK THIS SHEET.

BUILDING GROSS SQ. FT. = 3,426
DEMOLITION PLAN
SCALE: 1/4" = 1'-0"

SUSTAINABLE
PLANNING
ARCHITECTURE
INTERIOR DESIGN
OLSENDESIGNGROUP
ARCHITECTS
2345 Bernville Road
Reading, PA 19605
610.371.9606
Fax 610.371.9607
www.odgarchitects.com

COPYRIGHT © 2014
ALL RIGHTS RESERVED, NEITHER ALL NOR ANY PART OF THIS DOCUMENT MAY BE AMENDED, REPRODUCED, COPIED OR USED IN ANY FORM OR MANNER EXCEPT PURSUANT TO CONTRACT WITH OR WITH THE SPECIFIC WRITTEN PERMISSION OF Olsen Design Group Architects, Inc.
PROPERTY RIGHTS ARE EXPRESSLY RESERVED BY Olsen Design Group Architects, Inc.

Multani Associates, Inc.
955 Penn Avenue
Wyomissing, PA 19610
610-374-0821 (FAX) 610-374-7071

Wanko + Mitten Energy Systems
508 Chestnut Streer
Hamburg, PA 19526
610-914-1980 (FAX)

Renovations to
Recycling Center Baler Facility for
The City of Reading
Hill Road
Reading, Berks County, PA

△	Date	Activities	Dwg By	Chk By
	7/8/14	ISSUED FOR BIDDING	SWW	LWS

Revisions:

Drawing Title:
DEMOLITION PLAN

Project No: 14019	Scale: AS NOTED
Drawn By: SWW	Contract Date:
Checked By: LWS	Last Update: 7/6/14
Seal: REGISTERED ARCHITECT PENNSYLVANIA LEON C. OLSEN NO. 008452-X	Drawing No: D-1.0

DOOR SCHEDULE:

#1. STANDARD DOOR AND FRAME:
- (1) F16 5¾" MAS 70 HINGE JAMB
- (1) F16 5¾" MAS 70 STRIKE JAMB
- (1) F16 5¾" MAS 30 4" HEADER
- H.M. FRAME - WELDED
- FRAME REINFORCEMENT
- (1) 3070 PIONEER 161 H.M. DOOR
- (1) VSL 5"x35" LITE KIT, BRONZE ¼"
- (1) 4"x34"x¼" SAFETY GLASS
- (3) STANLEY FBB191 4.5x4.5 NRP 26D
- (1) LCN 1461 Rw/Pa x TBSRT & COVER ALUM. CLOSER
- (1) SCHLARGE ND53LD RHODES 626 ENTRY LOCK
- (1) SCHLARGE CYLINDER 40-100 626 "C" CLASSIC
- (1) 3'/0" WEATHERSTRP / THRESHOLD SET
- (1) A.D.A. APPROVED SIGNAGE

#2. OVERHEAD DOOR:
- OVERHEAD DOOR CORPORATION OR EQUAL
- 430 SERIES SECTIONAL DOOR
- QTY. OF DOORS: TWO (2)
- DOOR SIZE: 16'-2" WIDE x 11'-4" HEIGHT
- EXISTING DOOR OPENING: 16'-0" WIDE x 11'-3" HEIGHT
- JAMB TYPE: WOOD/BLOCKING
- NOMINAL 24 GA. ROLL-FORMED GALVANIZED STEEL SECTIONS CONSTRUCTED w/ RABBETTED MEETING RAILS TO FORM WEATHER TIGHT JOINTS
- 16 GA. CENTER AND END STILES
- 2" SECTION THICKNESS
- HINGES, TRACKS, AND FIXTURES TO BE GALVANIZED
- OPTIONAL HEAVY HARDWARE
- (1) #3 MANUAL CHAIN HOIST 7.75:1 RATIO (CAST WHEELS) (INCLUD 1" SOLID SHAFT)
- THE REMOVAL AND DISPOSAL OF ONE (1) EXISTING DOOR
- MINOR JAMB WORK (REMOVAL OF EXISTING WOOD JAMBS AND THE INSTALLATION OF WOOD JAMBS FOR THE EXISTING OPENINGS).

ALTERNATE #2. (MOTORIZED GARAGE DOORS):

- MOTOR OPERATOR FOR SECTIONAL DOOR:
  MODEL OPERATOR: SEL
  HP: ½
  TYPE MOUNTING: SIDE MOUNTED
- OPERATOR CONTROL:
  INTERIOR PUSH - BUTTON STATION
  SURFACE MOUNTED
  THREE BUTTON - OPEN / CLOSE / STOP
  NEMA 1
- ENTRAPMENT PROTECTION:
  PNEUMATIC SENSING EDGE

PAINT SPECIFICATION:
FOR BASE BID & ALTERNATE #4 BID

PART 1 - GENERAL
1.1 SECTION INCLUDES:

A. THIS SECTION INCLUDES THE SURFACE PREPARATION, AND APPLICATION OF PAINTS, COATINGS, AND FINISHES ON EXPOSED EXTERIOR AND INTERIOR ITEMS AND SURFACES. THE EXTENT OF PAINTING IS INDICATED IN THE DRAWINGS. THE PREPARATION AND FINISHING OF SURFACES SPECIFIED IN THIS SECTION ARE IN ADDITION TO THE SHOP PRIMING AND PAINTING SPECIFIED IN OTHER SECTIONS.

B. PAINT EXPOSED SURFACES WHEATHER OR NOT COLORS ARE DESIGNATED IN SCHEDULES, EXCEPT WHERE A MATERIAL IS SPECIFICALLY NOTED NOT TO BE PAINTED OR TO REMAIN NATURAL. WHERE AN ITEM IS NOT SPECIFICALLY MENTIONED, PAINT THE SAME AS SIMILAR ADJACENT SURFACES. IF COLOR OR FINISH IS NOT DESIGNATED, THE ARCHITECT WILL SELECT A COLOR FROM THE COATING MANUFACTURER'S STANDARD COLOR RANGE.

1.2 SUBMITTALS:

A. SUBMIT TWO SAMPLES, EACH ILLUSTRATING THE FULL RANGE OF COLORS AND TEXTURES AVAILABLE FOR EACH SURFACE FINISHING PRODUCT SPECIFIED.

1.3 QUALITY ASSURANCE

A. PERFORM WORK IN ACCORDANCE WITH MANUFACTURER'S INSTRUCTIONS AND REQUIREMENTS FOR PREPARATION OF SURFACES AND MATERIAL APPLICATION.

B. CONTRACTOR SHALL COORDINATE WORK OF ALL SPECIFICATION SECTIONS TO ENSURE THAT ALL PRIMERS AND UNDERCOATS ARE COMPATIBLE WITH FINISHING PRODUCTS.

C. PROVIDE PRIMER AND UNDERCOAT PRODUCTS PRODUCED BY SAME MANUFACTURER AS FINISH PRODUCTS.

1.3 ENVIRONMENTAL CONDITIONS:

A. DO NOT APPLY MATERIALS WHEN SURFACE AND AMBIENT TEMPERATURES ARE OUTSIDE OF THE TEMPERATURE RANGES REQUIRED BY THE PAINT PRODUCT MANUFACTURER.

B. APPLY WATER-BASED PAINTS ONLY WHEN THE SURFACE AND AMBIENT TEMPERATURES ARE BETWEEN 50 DEGREE AND 90 DEGREE F. APPLY SOLVENT-THINNED PAINTS ONLY WHEN THE SURFACE AND AMBIENT TEMPERATURES ARE BETWEEN 45 DEGREE AND 95 DEGREE F.

C. DO NOT APPLY ANY EXTERIOR COATINGS DURING RAIN, SLEET, OR SNOW, WHEN ANY PRECIPITATION IS IMMINENT, OR WHEN RELATIVE HUMIDITY IS OUTSIDE THE HUMIDITY RANGE REQUIRED BY THE COATING PRODUCT MANUFACTURER.

PART 2 - PRODUCTS
2.1 MANUFACTURERS:

A. ACCEPTABLE MANUFACTURERS OF PAINT:
1. THE GLIDDEN COMPANY
2. THE SHERWIN-WILLIAMS COMPANY
3. BENJAMIN MOORE AND COMPANY
4. OR ANY EQUAL.

2.2 MATERIALS:

A. COATINGS: READY-MIXED, EXCEPT FIELD-CRYSTALLIZED COATINGS. PROCESS PIGMENTS TO A SOFT PASTE CONSISTENCY, CAPABLE OF BEING READILY AND UNIFORMLY DISPERSED TO A HOMOGENEOUS COATING, GOOD FLOW AND BRUSHING QUALITIES, CAPABLE OF DRYING OR CURING FREE OF STREAKS OR SAGS.

B. PATCHING MATERIALS: LATEX FILLER

2.3 FINISHES:

A. REFER TO SCHEDULES AT THE END OF THIS SECTION.

PART 3 - EXECUTION
3.1 EXAMINATION:

A. VERIFY THAT SITE CONDITIONS AND SURFACES ARE CLEAN, DRY, FREE OF DEBRIS, AND READY TO RECEIVE WORK AS INSTRUCTED BY THE PRODUCT MANUFACTURER.

B. EXAMINE SURFACES TO BE FINISHED PRIOR TO COMMENCEMENT OF WORK. REPORT AND CORRECT ANY CONDITION THAT MAY POTENTIALLY AFFECT PROPER APPLICATION OF PAINTS.

C. CONFIRM THAT SURFACES, PRIMERS, AND FINISH PAINT MATERIALS ARE COMPATIBLE.

3.2 PREPARATION

A. IF AN AREA HAS BEEN DAMAGED DURING CONSTRUCTION OPERATIONS AND REQUIRES REFINISHING, THE ENTIRE SURFACE SHALL BE REFINISHED, I.E. AN ENTIRE WALL OF A ROOM FROM CORNER TO CORNER OR AN ENTIRE SOFFIT, FROM CORNER TO CORNER. MATCH EXISTING PAINT COLORS AS CLOSELY AS POSSIBLE.

B. WHERE NEW WORK ABUTS OR ALIGNS WITH EXISTING, PERFORM A SMOOTH AND EVEN TRANSITION. PATCH WORK TO MATCH EXISTING ADJACENT SURFACES IN TEXTURE, COLOR AND APPEARANCE.

C. REMOVE ANY PLATES, HARDWARE, LIGHT FIXTURE TRIM, ESCUTCHEONS, AND FITTINGS IN THE AREA TO BE REFINISHED PRIOR TO PREPARING SURFACES OR FINISHING.

D. CORRECT DEFECTS AND CLEAN SURFACES WHICH AFFECT WORK OF THIS SECTION. REMOVE EXISTING COATINGS THAT EXHIBIT LOOSE SURFACE DEFECTS.

E. SEAL WITH SHELLAC AND SEAL MARKS WHICH MAY BLEED THROUGH SURFACE FINISHES.

F. IMPERVIOUS SURFACES: REMOVE MILDEW BY SCRUBBING WITH SOLUTION OF TRI-SODIUM PHOSPHATE AND BLEACH. RINSE WELL WITH CLEAN WATER AND ALLOW SURFACES TO DRY THOROUGHLY.

G. GALVANIZED SURFACES: REMOVE SURFACE CONTAMINATION AND OILS AND WASH WITH SOLVENT. APPLY COAT OF ETCHING PRIMER.

H. WOOD WITH OPAQUE FINISH: ENSURE THAT ALL NAILS OR SCREWS ARE INSTALLED TO JUST BELOW WOOD SURFACE. SCRAPE AND REMOVE ANY LOOSE, CRACKED OR PEALING PAINT AND DIRT. THOROUGHLY SAND ALL SURFACES TO BE FINISHED. SEAL KNOTS, PITCH STREAKS, AND SAPPY SECTIONS. AFTER INITIAL PRIME COAT, FILL ANY CRACKS, VOIDS, RECESSES AND NAIL HOLES WITH FILLER COMPOUND THAT IS COMPATIBLE WITH SUBSEQUENT FINISHING.

3.3 APPLICATION:

A. APPLY PRODUCTS IN ACCORDANCE WITH MANUFACTURER'S INSTRUCTIONS. USE BRUSHES, ROLLERS, AND APPLICATORS AND TECHNIQUES BEST SUITED FOR SUBSTRATE AND TYPE OF MATERIAL BEING APPLIED.

B. DO NOT APPLY FINISHES TO SURFACES THAT ARE NOT DRY.

C. PAINT COLORS, SURFACE TREATMENTS, AND FINISHES ARE INDICATED IN COLOR SCHEDULE.

D. APPLY EACH COAT TO A UNIFORM THICKNESS AND TO COMPLETELY COVER THE SURFACE TO THE THICKNESS RECOMMENDED BY THE MANUFACTURER.

E. APPLY EACH COAT OF PAINT SLIGHTLY DARKER THAN THE PRECEDING COAT UNLESS OTHERWISE APPROVED.

F. DO NOT APPLY SUCCEEDING COATS UNTIL PREVIOUS COAT HAS DRIED AND CURED AS RECOMMENDED BY MANUFACTURER.

G. SAND WOOD GYPSUM, PLASTER AND METAL SURFACES LIGHTLY BETWEEN COATS TO ACHIEVE REQUIRED FINISH. THOROUGHLY BRUSH OR VACUUM CLEAN SURFACES FREE OF LOOSE PARTICLES OR DUST BEFORE APPLYING SUBSEQUENT COAT(S).

H. PAINT DOORS ON TOP, BOTTOM AND SIDE EDGES SAME AS FACES.

I. SAND LIGHTLY BETWEEN EACH SUCCEEDING ENAMEL COAT.

J. FINISH SURFACES BEHINE MOVABLE EQUIPMENT AND FURNITURE SAME AS EQUIVALENT EXPOSED SURFACES. PAINT SURFACES BEHINE PERMANENTLY FIXED EQUIPMENT AND FURNITURE WITH PRIME COAT ONLY BEFORE INSTALLATION OF EQUIPMENT AND FURNITURE.

3.4 CLEANING:

A. COLLECT WASTE MATERIAL WHICH MAY CONSTITUTE A FIRE HAZARD, PLACE IN CLOSED CONTAINER AND REMOVE DAILY FROM SITE.

B. MAINTAIN SITE FREE OF TRASH AND RUBBISH AND IN AN ORDERLY MANNER.

3.5 SCHEDULE - SHOP PRIMED ITEMS

A. PAINT EXPOSED METAL SURFACES OF LINTEL, LADDERS, STAIRS, AND MISCELLANEOUS METAL ITEMS SPECIFIED.

3.6 SCHEDULE - EXTERIOR SURFACES

A. GYPSUM BOARD AND CEMENT PLASTER SOFFITS:
1. ONE COAT OF LATEX PRIMER SEALER
2. TWO COATS OF FLAT LATEX PAINT

B. STEEL - UNPRIMED:
1. ONE COAT OF ALKYD PRIMER
2. TWO COATS OF ALKYD GLOSS ENAMEL

C. STEEL - SHOP PRIMED:
1. TOUCH-UP WITH ZINC CHROMATE PRIMER
2. TWO COATS OF ALKYD GLOSS ENAMEL

D. STEEL - GALVANIZED:
1. ONE COAT OF GALVANIZE PRIMER
2. TWO COATS OF ALKYD GLOSS ENAMEL

E. WOOD TRIM:
1. ONE COAT OF ALKYD PRIMER
2. TWO COATS OF ALKYD SEMI-GLOSS ENAMEL

F. CONCRETE MASONRY UNITS:
1. ONE COAT OF ARCYLIC LATEX BLOCK FILLER
2. TWO COATS OF FLAT LATEX

3.7 SCHEDULE - INTERIOR SURFACES:

A. WOOD - PAINTED:
1. ONE COAT OF LATEX PRIMER SEALER
2. TWO COATS OF SEMI-GLOSS LATEX ENAMEL

B. STEEL - PRIMED AND EXPOSED:
1. ONE COAT OF ALKYD PRIMER
2. TWO COATS OF SEMI-GLOSS ALKYD ENAMEL

C. STEEL - PRIMED AND EXPOSED:
1. TOUCH-UP WITH ALKYD PRIMER
2. TWO COATS OF SEMI-GLOSS ALKYD ENAMEL

D. STEEL - GALVANIZED AND EXPOSED:
1. ONE COAT OF GALVANIZED PRIMER
2. TWO COATS OF SEMI-GLOSS ALKYD ENAMEL

E. CONCRETE MASONRY UNITS:
1. ONE COAT OF ACRYLIC LATEX BLOCK FILLER
2. TWO COATS OF LATEX EGGSHELL ENAMEL

F. GYPSUM BOARD AND PLASTER:
1. ONE COAT OF LATEX PRIMER SEALER
2. TWO COATS OF LATEX EGGSHELL ENAMEL

G. WOOD TRIM:
1. ONE COAT OF LATEX PRIMER SEALER
2. TWO COATS OF LATEX SEMI-GLOSS ENAMEL

H. CONCRETE FLOORS:
1. TWO COATS OF DUST SEALER

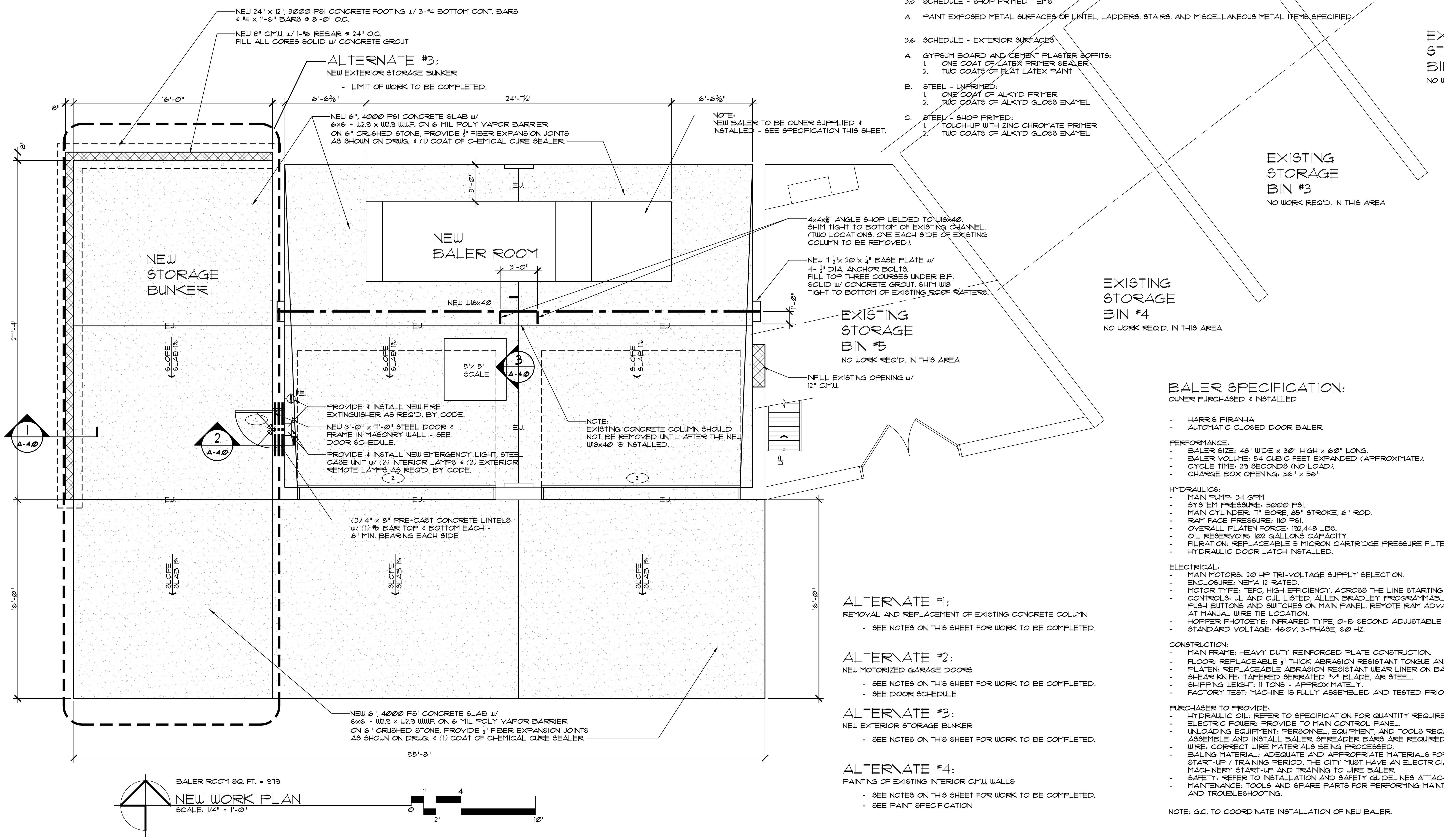

BALER ROOM SQ. FT. = 979

NEW WORK PLAN
SCALE: 1/4" = 1'-0"

0 1' 2' 4' 10'

ALTERNATE #1:
REMOVAL AND REPLACEMENT OF EXISTING CONCRETE COLUMN
- SEE NOTES ON THIS SHEET FOR WORK TO BE COMPLETED.

ALTERNATE #2:
NEW MOTORIZED GARAGE DOORS
- SEE NOTES ON THIS SHEET FOR WORK TO BE COMPLETED.
- SEE DOOR SCHEDULE

ALTERNATE #3:
NEW EXTERIOR STORAGE BUNKER
- SEE NOTES ON THIS SHEET FOR WORK TO BE COMPLETED.

ALTERNATE #4:
PAINTING OF EXISTING INTERIOR C.M.U. WALLS
- SEE NOTES ON THIS SHEET FOR WORK TO BE COMPLETED.
- SEE PAINT SPECIFICATION

BALER SPECIFICATION:
OWNER PURCHASED & INSTALLED

- HARRIS PIRANHA
- AUTOMATIC CLOSED DOOR BALER

PERFORMANCE:
- BALER SIZE: 48" WIDE x 30" HIGH x 60" LONG.
- BALER VOLUME: 54 CUBIC FEET EXPANDED (APPROXIMATE).
- CYCLE TIME: 29 SECONDS (NO LOAD).
- CHARGE BOX OPENING: 36" x 56"

HYDRAULICS:
- MAIN PUMP: 34 GPM
- SYSTEM PRESSURE: 5000 PSI.
- MAIN CYLINDER: 7" BORE, 85" STROKE, 6" ROD.
- RAM FACE PRESSURE: 110 PSI.
- OVERALL PLATEN FORCE: 192,448 LBS.
- OIL RESERVOIR: 102 GALLONS CAPACITY.
- FILRATION: REPLACEABLE 5 MICRON CARTRIDGE PRESSURE FILTER.
- HYDRAULIC DOOR LATCH INSTALLED.

ELECTRICAL:
- MAIN MOTORS: 20 HP TRI-VOLTAGE SUPPLY SELECTION.
- ENCLOSURE: NEMA 12 RATED.
- MOTOR TYPE: TEFC, HIGH EFFICIENCY, ACROSS THE LINE STARTING IS STANDARD.
- CONTROLS: UL AND CUL LISTED, ALLEN BRADLEY PROGRAMMABLE CONTROLLER. PUSH BUTTONS AND SWITCHES ON MAIN PANEL. REMOTE RAM ADVANCED AND RETRACT AT MANUAL WIRE TIE LOCATION.
- HOPPER PHOTOEYE: INFRARED TYPE, 0-15 SECOND ADJUSTABLE TIME DELAY.
- STANDARD VOLTAGE: 460V, 3-PHASE, 60 HZ.

CONSTRUCTION:
- MAIN FRAME: HEAVY DUTY REINFORCED PLATE CONSTRUCTION.
- FLOOR: REPLACEABLE ½" THICK ABRASION RESISTANT TONGUE AND GROOVE WEAR LINERS.
- PLATEN: REPLACEABLE ABRASION RESISTANT WEAR LINER ON BASE OF PLATEN.
- SHEAR KNIFE: TAPERED SERRATED "V" BLADE, AR STEEL.
- SHIPPING WEIGHT: 11 TONS - APPROXIMATELY.
- FACTORY TEST: MACHINE IS FULLY ASSEMBLED AND TESTED PRIOR TO SHIPPING.

PURCHASER TO PROVIDE:
- HYDRAULIC OIL: REFER TO SPECIFICATION FOR QUANTITY REQUIRED.
- ELECTRIC POWER: PROVIDE TO MAIN CONTROL PANEL.
- UNLOADING EQUIPMENT: PERSONNEL, EQUIPMENT, AND TOOLS REQUIRED TO UNLOAD ASSEMBLE AND INSTALL BALER. SPREADER BARS ARE REQUIRED FOR LIFTING EQUIPMENT.
- WIRE: CORRECT WIRE MATERIALS BEING PROCESSED.
- BALING MATERIAL: ADEQUATE AND APPROPRIATE MATERIALS FOR PROCESSING DURING THE START-UP / TRAINING PERIOD. THE CITY MUST HAVE AN ELECTRICIAN ON SITE THE DAY OF MACHINERY START-UP AND TRAINING TO WIRE BALER.
- SAFETY: REFER TO INSTALLATION AND SAFETY GUIDELINES ATTACHED.
- MAINTENANCE: TOOLS AND SPARE PARTS FOR PERFORMING MAINTENANCE, ADJUSTMENTS AND TROUBLESHOOTING.

NOTE: G.C. TO COORDINATE INSTALLATION OF NEW BALER.

SCALE SPECIFICATION:
OWNER PURCHASED & INSTALLED

- STANDARD FLOOR SCALE
- MODEL: H-1607
- DIMENSIONS: 5'x5'x4"
- CAPACITY/ACCURACY: 5,000 lbs. x 1 lb.
- SHIPPING WEIGHT: 450 lbs.
- LED DISPLAY ¾" NUMBERS
- LB/KG CONVERTIBLE
- FULL CAPACITY TARE
- AUTO ZERO TRACKING
- FACTORY PRE-CALIBRATED
- 15' CABLE & MOUNTING BRACKET
- NTEP APPROVED

NOTE: G.C. TO COORDINATE INSTALLATION OF NEW SCALE.

SUSTAINABLE
PLANNING
ARCHITECTURE
INTERIOR DESIGN
OLSEN DESIGN GROUP ARCHITECTS
2345 Bernville Road
Reading, PA 19605
610.371.9606
Fax 610.371.9607
www.odgarchitects.com

COPYRIGHT © 2014
ALL RIGHTS RESERVED, NEITHER ALL NOR ANY PART OF THIS DOCUMENT MAY BE AMENDED, REPRODUCED, COPIED OR USED IN ANY FORM OR MANNER EXCEPT PURSUANT TO CONTRACT WITH OR WITH THE SPECIFIC WRITTEN PERMISSION OF Olsen Design Group Architects, Inc.
PROPERTY RIGHTS ARE EXPRESSLY RESERVED BY Olsen Design Group Architects, Inc.

Multani Associates, Inc.
955 Penn Avenue
Wyomissing, PA 19610
610-374-0821 (FAX) 610-374-7071

Wanko + Mitten Energy Systems
508 Chestnut Streer
Hamburg, PA 19526
610-914-1980 (FAX)

Renovations to
Recycling Center Baler Facility for
The City of Reading
Hill Road
Reading, Berks County, PA

△	Date	Activities	Dwg By	Chk By
	7/8/14	ISSUED FOR BIDDING	SWW	LWS

Revisions:

Drawing Title:
NEW WORK PLAN

Project No: 14019	Scale: AS NOTED
Drawn By: SWW	Contract Date:
Checked By: LWS	Last Update: 7/6/14
Seal: REGISTERED ARCHITECT PENNSYLVANIA LEON C. OLSEN NO. 008452-X	Drawing No: A-1.0

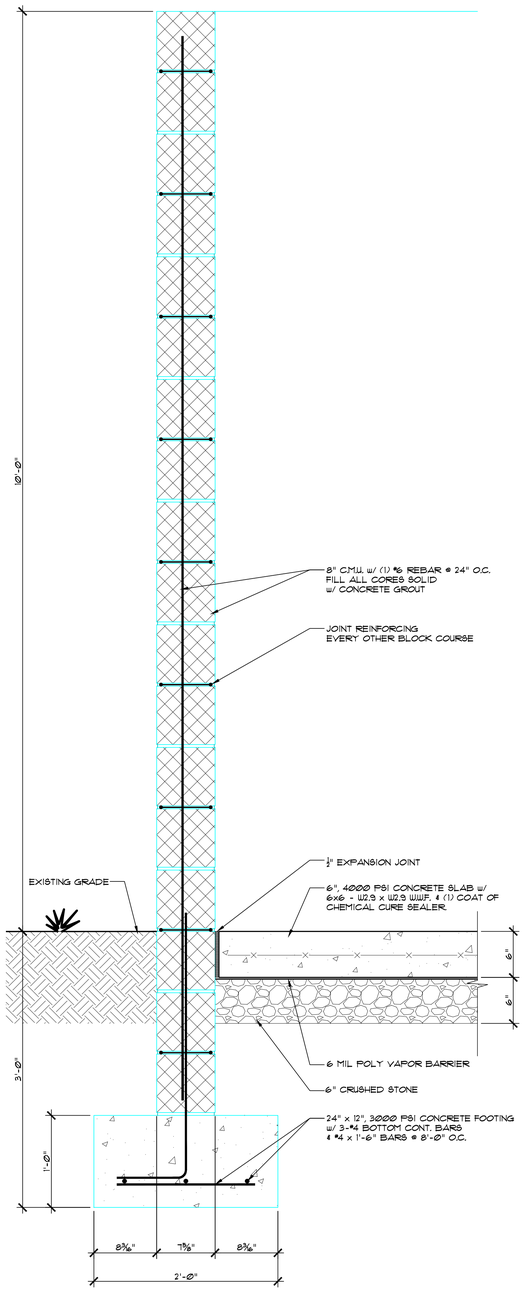

1 A-4.0 NEW BUNKER WALL SECTION
SCALE: 1 1/2" = 1'-0"

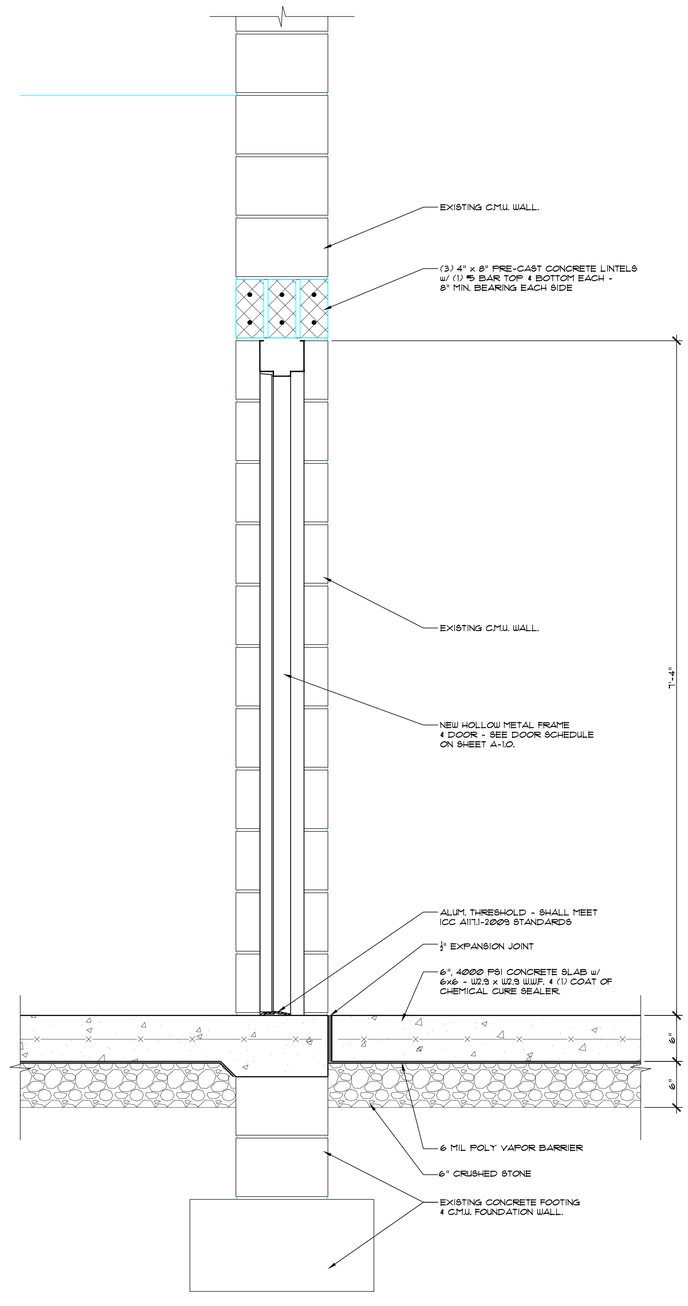

2 A-4.0 EXISTING BALER ROOM WALL SECTION
SCALE: 1 1/2" = 1'-0"

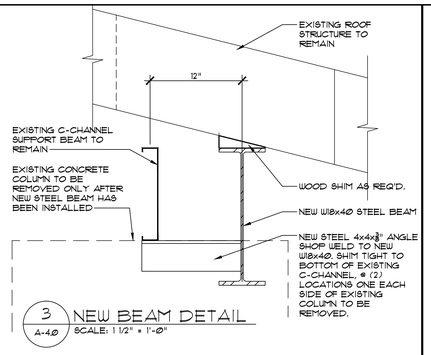

3 A-4.0 NEW BEAM DETAIL
SCALE: 1 1/2" = 1'-0"

SUSTAINABLE
PLANNING
ARCHITECTURE
INTERIOR DESIGN

OLSENDESIGNGROUP
ARCHITECTS

2345 Bernville Road
Reading, PA 19605
610.371.9606
Fax 610.371.9607
www.odgarchitects.com

COPYRIGHT © 2014
ALL RIGHTS RESERVED. NEITHER ALL NOR ANY PART OF THIS DOCUMENT MAY BE AMENDED, REPRODUCED, COPIED OR USED IN ANY FORM OR MANNER EXCEPT PURSUANT TO CONTRACT WITH OR WITH THE SPECIFIC WRITTEN PERMISSION OF Olsen Design Group Architects, Inc.
PROPERTY RIGHTS ARE EXPRESSLY RESERVED BY Olsen Design Group Architects, Inc.

Multani Associates, Inc.
955 Penn Avenue
Wyomissing, PA 19610
610-374-0821 (FAX) 610-374-7071

Wanko + Mitten Energy Systems
508 Chestnut Streer
Hamburg, PA 19526
610-914-1980 (FAX)

Renovations to
Recycling Center Baler Facility for
The City of Reading
Hill Road
Reading, Berks County, PA

Date	Activities	Dwg By	Chk By
7/8/14	ISSUED FOR BIDDING	SWW	LWS

Revisions:

Drawing Title:
SECTIONS & DETAILS

Project No: 14019	**Scale:** AS NOTED
Drawn By: SWW	**Contract Date:**
Checked By: LWS	**Last Update:** 7/8/14
Seal: REGISTERED ARCHITECT PENNSYLVANIA	**Drawing No:** A-4.0

ABBREVIATIONS

A or AMP	AMPERES
AF	AMP FRAME
AFC	ABOVE FINISHED CEILING
AFF	ABOVE FINISHED FLOOR
AFG	ABOVE FINISHED GRADE
AHU	AIR HANDLING UNIT
A.I.C.	AMPERE INTERRUPTING CAPACITY
AM	AMMETER
ARCH	ARCHITECT
AS	AMMETER SWITCH
AT	AMP TRIP
ATC	AUTOMATIC TEMPERATURE CONTROL
ATS	AUTOMATIC TRANSFER SWITCH
AWG	AMERICAN WIRE GUAGE
BFF	BELOW FINISHED FLOOR
BFG	BELOW FINISHED GRADE
BKR	BREAKER
B.O.D.	BASIS OF DESIGN
C	CONDUIT
C/B	CIRCUIT BREAKER
CKT	CIRCUIT
CL	CENTERLINE
CLG	CEILING
CPT	CONTROL POWER TRANSFORMER
CT	CURRENT TRANSFORMER
CU	COPPER
DEMO	DEMOLITION
DC	DIRECT CURRENT
DIA	DIAMETER
DISC	DISCONNECT
DPDT	DOUBLE POLE, DOUBLE THROW
E OR EX	EXISTING
EC	ELECTRICAL CONTRACTOR
EDH	ELECTRIC HAND DRYER
EF	EXHAUST FAN
ELEC	ELECTRICAL
EM	EMERGENCY
EMT	ELECTRICAL METALLIC TUBING
ENCL	ENCLOSURE
E.O.	ELECTRICALLY OPERATED
ETD	EXISTING TO BE DEMOLISHED
ETR	EXISTING TO REMAIN
ETRL	EXISTING TO BE RELOCATED
EWC	ELECTRIC WATER COOLER
F	FUSED
FA	FIRE ALARM
FACP	FIRE ALARM CONTROL PANEL
FCU	FAN COIL UNIT
FLA	FULL LOAD AMPERES
FLUOR	FLUORESCENT
G	EQUIPMENT GROUND CONDUCTOR
GA	GAUGE
GC	GENERAL CONTRACTOR
GFI	GROUND FAULT INTERRUPTER
GND	GROUND
HID	HIGH INTENSITY DISCHARGE
H-O-A	HAND-OFF-AUTOMATIC
HP	HORSE POWER
HT	HEIGHT
HV	HIGH VOLTAGE
HVAC	HEATING, VENTILATING, AIR CONDITIONING
ILL	ILLUMINATION
IMC	INTERMEDIATE METALLIC CONDUIT
JB	JUNCTION BOX
KCMIL	KILO CIRCULAR MILS
KVA	KILOVOLT-AMPERES
KW	KILOWATTS
KWH	KILOWATT-HOUR
LRA	LOCK ROTOR AMPERES
LGT	LIGHTING
LV	LOW VOLTAGE
M	MAIN
MAX	MAXIMUM
MC	MECHANICAL CONTRACTOR
MCB	MAIN CIRCUIT BREAKER
MFG	MANUFACTURER
MLO	MAIN LUGS ONLY
M.O.	MECHANICALLY OPERATED
MTD	MOUNTED
MTS	MANUAL TRANSFER SWITCH
MV	MEDIUM VOLTAGE
N	NEUTRAL
N.C	NORMALLY CLOSED
NEC	NATIONAL ELECTRIC CODE
N.I.C.	NOT IN CONTRACT
N.O.	NORMALLY OPEN
N.T.S.	NOT TO SCALE
O.C.	ON CENTER
OCP	OVERCURRENT PROTECTION
P	POLE
PB	PULL BOX
PC	PLUMBING CONTRACTOR
PF	POWER FACTOR
PH OR Ø	PHASE
PNL	PANEL
PRI	PRIMARY
P.S.I	POUNDS PER SQUARE INCH
PT	POTENTIAL TRANSFORMER
PV	PHOTOVOLTAIC
PVC	POLYVINYL CHLORIDE
PWR	POWER
QTY	QUANTITY
REC	RECEPTACLE
RGS	RIGID GALVANIZED STEEL
RTU	ROOF TO UNIT
SEC	SECONDARY
SLD	SINGLE LINE DIARGAM
SLV	SLEEVE
SPEC	SPECIFICATION
SPD	SURGE PROTECTION DEVICE
SPDT	SINGLE POLE, DOUBLE THROW
SPST	SINGLE POLE, SINGLE THROW
S.T.A.	SHUNT TRIP
STD	STANDARD
STP	SHIELDED TWISTED PAIR
SW	SWITCH
SYS	SYSTEM
TEL	TELEPHONE
TV	TELEVISION
TYP	TYPICAL
TS	TIME SWITCH
UH	UNIT HEATER
UF	UNFUSED
UG	UNDERGROUND
U.L.	UNDERWRITERS LABORATORY
UPS	UNINTERRUPTIBLE POWER SUPPLY
UTP	UNSHIELDED TWISTED PAIR
V	VOLTS
VA	VOLT AMPERES
VAV	VARIABLE AIR VOLUME
VM	VOLT METER
W	WIRE
W	WATT
WP	WEATHERPROOF
XFMR	TRANSFORMER
XP	EXPLOSION PROOF

THE ELECTRICAL SYSTEMS PRESENTED ON THE SUBSEQUENT DRAWINGS WERE DESIGNED IN ACCORDANCE WITH THE FOLLOWING APPLICABLE CODES AND STANDARDS:

- THE NATIONAL ELECTRICAL CODE (NEC)
- INTERNATIONAL BUILDING CODE (IBC)
- INTERNATIONAL ENERGY CONSERVATION CODE (IECC)
- ASHRAE STANDARD 90.1

CIRCUITING SCHEDULE	
CIRCUITING SYMBOL	CIRCUITING TYPE
H-1,3,5	THREE, 1 POLE CIRCUITS
H-1/3/5	ONE, 3 POLE CIRCUIT
	SWITCH LEG, GROUND, HOT, AND NEUTRAL WIRING
	IG, EQUIPMENT GROUND, HOT, AND NEUTRAL WIRING
	GROUND, HOT, AND NEUTRAL WIRING
	CONDUIT STUB UP
	CONDUIT STUB DOWN
	CONDUIT/WIRING
	CONDUIT/WIRING UNDER FLOOR

RECEPTACLE SCHEDULE					
POWER SYMBOL	RECEPTACLE TYPE	NEMA TYPE	VOLTAGE	MANUFACTURER, MODEL #	REMARKS
	GFCI DUPLEX	L5-20R	125	LEGRAND, 2095W	(1)

REMARKS:
(1) PROVIDE WITH SHIM-LOCKS.

SWITCH SCHEDULE				
SWITCH SYMBOL	SWITCH TYPE	VOLTAGE	MANUFACTURER	REMARKS
S	SINGLE POLE	120/277	LEGRAND, CSB20AC1W	
S_3	THREE WAY	120/277	LEGRAND, CSB20AC3W	
PC	PHOTOCELL	120/277		
TC	TIME CLOCK	120/277		

REMARKS:
(1) DIMMERS SHALL BE DERATED WHEN FINS ARE BROKEN. REFER TO MANUFACTURER DERATING REQUIREMENTS.
(2) PROVIDE SWITCH SIZE AS REQUIRED FOR MOTOR HP SIZE.
(3) PROVIDE DIMMER TYPE AS REQUIRED FOR LIGHTING LOAD.
(4) WHERE THREE WAY DIMMERS ARE REQUIRED, PROVIDE APPROPRIATE COMPANION DIMMER.
(5) PROVIDE 2 KEYS WITH EACH KEY SWITCH, LEGRAND MODEL #500K.

ELECTRICAL DEMOLITION GENERAL NOTES

ED-1 CONTRACTOR TO REMOVE ALL EXISTING LIGHTING FIXTURES. LIGHTING FIXTURE AND ALL ASSOCIATED WIRING AND CONDUIT TO BE REMOVED BACK TO SOURCE.

ED-2 DEMOLITION OF ALL EXISTING ELECTRICAL EQUIPMENT AND ASSOCIATED PIPING SHALL BE COORDINATED WITH NEW WORK INSTALLATION.

ED-3 AT EQUIPMENT/ DEVICES/ LIGHTING FIXTURES BEING REMOVED, ABANDON CONDUIT AND BOXES IN BLOCK WALLS TO REMAIN. REMOVE ALL WIRE AND CONDUIT EXPOSED AND ABOVE CEILING BACK TO SOURCE. COVER ALL BOXES TO REMAIN IN BLOCK WALL WITH BLANK COVER PLATES.

ED-4 THIS CONTRACTOR WILL BE HELD RESPONSIBLE FOR ANY/ALL DAMAGES TO EXISTING FLOORS, FLOOR TILES, WALLS, CEILINGS, FURNISHINGS, ETC. DUE TO THE REMOVAL PROCESS OF ELECTRICAL EQUIPMENT AND ALL ASSOCIATED ITEMS.

ED-5 ALL MATERIAL AND EQUIPMENT REMOVED SHALL BE PROPERLY DISPOSED OF BY THE CONTRACTOR.

ED-6 DISCONNECT AND REMOVE ALL SWITCHES, RECEPTACLES, ETC. FROM WALLS BEING REMOVED. ENSURE THAT ALL ADJACENT DEVICES REMAINING ARE ENERGIZED.

ED-7 THE DEMOLITION PLAN AS SHOWN IS NOT TO BE CONSIDERED ALL INCLUSIVE BUT IS TO BE A GENERAL GUIDE TO THE SCOPE OF THE DEMOLITION. ALL DEMOLITION MUST BE PERFORMED AS REQUIRED TO BRING THE AREA SHOWN TO A STATE WHERE THE NEW CONSTRUCTION WORK CAN BE ACCOMPLISHED AS SHOWN ON THESE CONSTRUCTION DOCUMENTS.

ED-8 CONTRACTOR SHALL REMOVE ALL EXISTING LIGHTING FIXTURES, BOXES, WIRING, AND CONDUITS FROM WALLS OR CEILING BEING REMOVED. EXISTING CIRCUIT BREAKERS SERVING THE REMOVED ITEMS SHALL BE MADE SPARE.

ED-9 MAINTAIN CONTINUITY OF ALL EXISTING CIRCUITS REMAINING IN OTHER AREAS.

ED-10 ALL EXISTING CONDUITS AND WIRING NOT BEING USED SHALL BE REMOVED BACK TO SOURCE.

ED-11 LABEL ALL UNUSED CIRCUIT BREAKERS IN PANELS AS SPARES. IDENTIFY EQUIPMENT AND LOADS THAT REMAIN CONNECTED. PROVIDE UPDATED PANEL SCHEDULE AS PART OF 'AS BUILT SUBMITTAL'.

ED-12 ALL ITEMS BEING REMOVED AS SHOWN IN HEAVY DASHED LINES.

ED-13 ALL ITEMS TO REMAIN ARE SHOWN IN SOLID LIGHT LINES.

BRANCH CIRCUIT WIRING REQUIREMENTS	
120 OR 277 VOLT, 1Ø, 2W CIRCUIT	
CIRCUIT BREAKER	MINIMUM CONDUCTOR REQUIREMENT
20A-1P	2 #12AWG + 1 #12AWG GROUND IN ¾" CONDUIT
30A-1P	2 #10AWG + 1 #10AWG GROUND IN ¾" CONDUIT
40A-1P	2 #8AWG + 1 #10AWG GROUND IN ¾" CONDUIT
50A-1P	2 #6AWG + 1 #10AWG GROUND IN ¾" CONDUIT
60A-1P	2 #6AWG + 1 #10AWG GROUND IN ¾" CONDUIT
208 VOLT, 1Ø, 2W CIRCUIT	
20A-2P	2 #12AWG + 1 #12AWG GROUND IN ¾" CONDUIT
30A-2P	2 #10AWG + 1 #10AWG GROUND IN ¾" CONDUIT
40A-2P	2 #8AWG + 1 #10AWG GROUND IN ¾" CONDUIT
50A-2P	2 #6AWG + 1 #10AWG GROUND IN ¾" CONDUIT
60A-2P	2 #6AWG + 1 #10AWG GROUND IN ¾" CONDUIT
120/208 VOLT, 1Ø, 3W CIRCUIT	
20A-2P	3 #12AWG + 1 #12AWG GROUND IN ¾" CONDUIT
30A-2P	3 #10AWG + 1 #10AWG GROUND IN ¾" CONDUIT
40A-2P	3 #8AWG + 1 #10AWG GROUND IN ¾" CONDUIT
50A-2P	3 #6AWG + 1 #10AWG GROUND IN ¾" CONDUIT
60A-2P	3 #6AWG + 1 #10AWG GROUND IN ¾" CONDUIT
208 OR 480 VOLT, 3Ø, 3W CIRCUIT	
20A-3P	3 #12AWG + 1 #12AWG GROUND IN ¾" CONDUIT
30A-3P	3 #10AWG + 1 #10AWG GROUND IN ¾" CONDUIT
40A-3P	3 #8AWG + 1 #10AWG GROUND IN ¾" CONDUIT
50A-3P	3 #6AWG + 1 #10AWG GROUND IN ¾" CONDUIT
60A-3P	3 #6AWG + 1 #10AWG GROUND IN ¾" CONDUIT
208Y120 OR 480Y277 VOLT, 3Ø, 4W CIRCUIT	
20A-3P	4 #12AWG + 1 #12AWG GROUND IN ¾" CONDUIT
30A-3P	4 #10AWG + 1 #10AWG GROUND IN ¾" CONDUIT
40A-3P	4 #8AWG + 1 #10AWG GROUND IN ¾" CONDUIT
50A-3P	4 #6AWG + 1 #10AWG GROUND IN 1" CONDUIT
60A-3P	4 #6AWG + 1 #10AWG GROUND IN 1" CONDUIT

NOTES:
1. ALL BRANCH CIRCUIT WIRING IN THIS TABLE IS BASED ON CONDUIT RUNS THE FOLLOWING LENGTHS:
 120V - 65 FEET
 277 V - 150 FEET
 IF CIRCUITS LENGTHS EXCEED THESE VALUES, THE WIRE SIZE SHALL BE INCREASED PER THE VOLTAGE DROP SCHEDULE. RACEWAYS SHALL BE INCREASED ACCORDINGLY. LARGE CABLES SHALL BE REDUCED IN A JUNCTION BOX PRIOR TO DEVICE TERMINATION. WIRE REDUCERS SHALL BE PROVIDED AT CIRCUIT BREAKER AS REQUIRED.
2. IF MC CABLE IS APPROVED FOR USE BY ENGINEER AND AHJ, THE MC CABLE SHALL INCLUDE A FULL SIZE INSULATED GROUND CONDUCTOR. SIZE OF WIRING SHALL BE PER THE ABOVE SCHEDULE AND VOLTAGE DROP SCHEDULE.
3. ALL AMPACITIES ARE BASED ON 75°C TEMPERATURE RATING OF CONDUCTORS AS INDICATED IN THE NATIONAL ELECTRIC CODE.

FIRE ALARM DEVICE SYMBOLS		
FIRE ALARM SYMBOL	DESCRIPTION	REMARKS
	PHOTOELECTRIC SMOKE DETECTOR	
HD	HEAT DETECTOR	
F	MANUAL PULL STATION	
	FIRE ALARM SPEAKER	
	FIRE ALARM SPEAKER/STROBE	
	FIRE ALARM STROBE	
FACP	FIRE ALARM CONTROL PANEL	

ELECTRICAL GENERAL NOTES

E-1 THESE GENERAL ELECTRICAL NOTES APPLY TO ALL DRAWINGS IN THE PROJECT.

E-2 THE ELECTRICAL CONTRACTOR SHALL REVIEW ALL OF THE CONTRACT DOCUMENTS (DRAWINGS, SPECIFICATIONS, EQUIPMENT CUTSHEETS) AND ANY OWNER PROVIDED EQUIPMENT FOR ELECTRICAL REQUIREMENTS AND INCLUDE ALL ELECTRICAL WORK.

E-3 COORDINATE EXACT TERMINATION METHODS (RECEPTACLES OR HARDWIRE) WITH EQUIPMENT (OWNER PROVIDED EQUIPMENT) CUTSHEETS PRIOR TO ROUGH-IN.

E-4 COORDINATE EXACT LOCATION AND MOUNTING HEIGHTS WITH ARCHITECTURAL DOCUMENTS PRIOR TO ROUGH-IN.

E-5 WHERE MULTIPLE WIRING DEVICES ARE SHOWN IN ONE LOCATION, THESE DEVICES SHALL BE MOUNTED UNDER A COMMON COVERPLATE UNLESS NOTED OTHERWISE. WHERE SWITCHES ARE SHOWN ADJACENT TO DIMMERS, THE SWITCH SHALL MATCH THE DIMMER STYLE AND FUNCTION. SECTIONAL WALL PLATES ARE NOT PERMITTED.

E-6 PRIOR TO ROUGH-IN, THE CONTRACTOR SHALL COORDINATE FINAL CONNECTION OF ALL OWNER FURNISHED EQUIPMENT AND EQUIPMENT FURNISHED UNDER OTHER DIVISIONS OF THE WORK IN ACCORDANCE WITH THE MANUFACTURERS SPECIFICATIONS AND INSTALLATION REQUIREMENTS.

E-7 WHEREVER THE WORD "PROVIDE" IS USED, IT SHALL MEAN TO "FURNISH AND INSTALL COMPLETE AND READY FOR USE." CONTRACTOR SHALL PROVIDE ALL TESTING AND INSTRUCTIONS REQUIRED FOR OPERATION AND MAINTENANCE OF EQUIPMENT AND SYSTEMS INSTALLED.

E-8 THE CONTRACTOR IS RESPONSIBLE FOR OBTAINING AND SHALL BARE THE COSTS OF ALL NECESSARY PERMITS AND INSPECTIONS.

E-9 ALL WORKMANSHIP, MATERIALS, AND EQUIPMENT SHALL BE GUARANTEED FOR A PERIOD OF ONE YEAR AFTER OWNER OCCUPANCY.

E-10 ALL OPENINGS CUT THROUGH WALLS BY THE CONTRACTOR SHALL BE RESEALED WITH APPROPRIATE FIRE RATED MATERIAL AFTER COMPLETION OF WORK.

E-11 ALL NEW WORK SHALL BE CONCEALED IN CEILINGS, WALLS, ETC IN FINISHED SPACES. ALL NEW WORK SHALL BE INSTALLED IN SURFACE MOUNTED CONDUITS AND BOXES IN UNFINISHED SPACES.

E-12 CONFIRM ALL DOOR SWINGS BEFORE INSTALLING SWITCH BOXES.

E-13 CONTRACTOR SHALL COORDINATE THE EXACT LOCATION OF SUSPENDED AND/OR SURFACE MOUNTED LUMINAIRES IN MECHANICAL, ELECTRICAL, AND STORAGE AREAS WITH OTHER TRADES PRIOR TO ROUGH-IN AND INSTALLATION.

E-14 UNLESS OTHERWISE INDICATED, ALL PANELS, CABINETS, AND THE LIKE IN ELECTRICAL CLOSETS OR EQUIPMENT ROOMS ARE TO BE MOUNTED ON STRUCTURAL CHANNEL FRAMING WHICH SHALL BE HUNG DIRECTLY FROM STRUCTURAL STEEL WORK OR SUPPLEMENTARY MEMBERS OR ANCHORS EMBEDDED IN CONCRETE. ALL HUNG LOADS SHALL BE COORDINATED WITH THE STRUCTURAL ENGINEER.

E-15 MAINTAIN SEPARATION OF EMERGENCY CIRCUIT WIRING FROM NORMAL CIRCUIT WIRING PER THE NEC.

E-16 ALL WORK SHALL BE PERFORMED AS REQUIRED BY APPLICABLE SECTIONS OF NEC CODE, GOVERNING LOCAL CODES, LAWS, AND REGULATIONS.

E-17 ALL CONFLICT, WHICH MAY PREVENT THE COMPLETION OF WORK AS INTENDED, SHALL BE BROUGHT TO THE OWNER/ARCHITECT/ENGINEER'S ATTENTION. THE CONTRACTOR SHALL NOT PROCEED WITH ANY RELATED WORK UNTIL ALL CONFLICTS ARE RESOLVED AND THE CLARIFYING INFORMATION IS ISSUED TO THE CONTRACTOR.

E-18 TEMPORARY OUTAGES TO MAKE FINAL TERMINATIONS AND CONNECTIONS SHALL BE MINIMIZED WHEREVER POSSIBLE AND SHALL BE SCHEDULED WITH THE OWNER TWO WEEKS PRIOR TO AN ANTICIPATED BUILDING SHUTDOWN.

E-19 BUILDING WIRING SHALL INCLUDE INSULATED GROUND AND NEUTRAL CONDUCTOR FOR ALL CIRCUITS. NEUTRAL CONDUCTORS SHALL NOT SERVE MORE THAN ONE CIRCUIT.

E-20 PROVIDE ALL MATERIALS, BRACING, HANGERS, AND EQUIPMENT REQUIRED FOR A COMPLETE AND OPERATIONAL ELECTRICAL SYSTEM. ALL MATERIAL AND EQUIPMENT INSTALLED SHALL BE NEW AND U.L. LISTED.

E-21 PROVIDE COMPLETE AS-BUILT DRAWINGS INDICATING ALL CHANGES IN EQUIPMENT/DEVICES/CONDUIT LOCATIONS AND DELIVER TO OWNER UPON COMPLETION OF THE WORK.

E-22 BRANCH CIRCUIT HOMERUNS TO REFERENCED PANELBOARD SHALL BE SIZED PER NEC UNLESS SHOWN OR SPECIFIED OTHERWISE.

E-23 MINIMUM CONDUIT SIZE SHALL BE ¾" AND MINIMUM WIRE SIZE SHALL BE #12 AWG; THW, THHW, OR THWN (75°C RATING). ALL HOMERUNS SHALL BE IN CONDUIT.

E-24 ALL WIRING METHODS FOR THIS PROJECT SHALL BE IN ACCORDANCE WITH AND AS APPROVED BY THE N.E.C. FOR THE USE INTENDED. ALL CONDUCTORS ASSOCIATED WITH THE ELECTRICAL SERVICE ENTRANCE AND PANELBOARD FEEDERS SHALL BE INSTALLED IN CONDUIT OR AS OTHERWISE SPECIFIED ON THE DRAWINGS.

E-25 CONDUITS THAT ARE PERMITTED TO BE RUN EXPOSED IN UNFINISHED SPACES AND ARE DETERMINED BY THE ARCHITECT TO BE EXPOSED TO PHYSICAL DAMAGE OR WATER, SHALL BE GALVANIZED RIGID STEEL.

E-26 RACEWAYS, BOXES, ETC. PROVIDED AS PART OF THIS CONTRACT AND INSTALLED ABOVE SUSPENDED CEILINGS, SHALL BE SUPPORTED DIRECTLY FROM THE STRUCTURE INDEPENDENT OF THE CEILING SYSTEM, DUCTS, PIPING OR OTHER SYSTEMS.

E-27 JUNCTION AND PULLBOXES SHALL BE INSTALLED AT SUCH LOCATIONS AS MAY BE REQUIRED TO FACILITATE THE INSTALLATION OF ELECTRICAL CONDUCTORS. EACH BOX SHALL BE PROVIDED WITH A REMOVABLE COVER. BOXES SHALL BE SMOOTH SQUARE AND TRUE, SHALL BE SET PARALLEL WITH THE WALLS AND CEILINGS AND SHALL NOT BE PLACED IN LOCATIONS MADE INACCESSIBLE BY PIPING, DUCTS OR OTHER EQUIPMENT.

E-28 CIRCUIT BREAKERS SHALL HAVE QUICK-MAKE, QUICK-BREAK MECHANISM AND THERMAL MAGNETIC TRIP ELEMENTS. THE QUANTITY OF POLES, AMPERE RATING SHALL BE AS INDICATED ON THE DRAWINGS. MINIMUM INTERRUPTING RATING OF ANY CIRCUIT BREAKER SHALL BE 10,000 AMPERES SYMMETRICAL.

E-29 CONNECT EMERGENCY BATTERY LIGHTING UNITS, REMOTE HEADS AND EXIT SIGNS TO HOT WIRE AHEAD OF ANY LOCAL SWITCHING.

E-30 ELECTRICAL CONTRACTOR TO SUPPLY ALL GROUNDING & BONDING REQUIREMENTS PER NEC.

E-31 SUBMIT FOR APPROVAL, DETAILED SHOP DRAWINGS AND CATALOG CUT SHEETS FOR ALL EQUIPMENT AND MATERIAL. ORDER OR DELIVER TO THE JOB SITE MATERIAL AND EQUIPMENT FOR WHICH THERE IS APPROVED SHOP DRAWINGS.

ELECTRICAL SITE SYMBOLS			
SYMBOL	DESCRIPTION	SERVICE TYPE	SERVICE ABBREVIATION
—UE—	UNDERGROUND CONDUIT OR DUCTBANK	UE	UNDERGROUND ELECTRIC
		UT	UNDERGOUND TELEPHONE
		UC	UNDERGROUND COMMUNICATIONS
—OE—	OVERHEAD SERVIE	OE	OVERHEAD ELECTRIC
		OT	OVERHEAD TELEPHONE
		OC	OVERHEAD COMMUNICATIONS
— —G— —	GROUNDING CONDUCTOR		
Ø	UTILITY POLE		
	GROUNDING ROD		

PANELS SCHEDULE						
PANEL SYMBOL	MOUNTING	VOLTAGE	PHASE	MANUFACTURER, TYPE	MAX AMP RATING	REMARKS
	SURFACE	208Y120	3ϕ	SQUARE , NQOD	MCB - 400 MLO - 600	(1)
	SURFACE	480Y277	3ϕ	SQUARE D, NF	MCB - 600 MLO - 800	(1)

REMARKS:
(1) SEE INDIVIDUAL PANEL SCHEDULES FOR AIC RATINGS AND BREAKER REQUIREMENTS

POWER DEVICE SYMBOLS	
POWER SYMBOL	DESCRIPTION
JB	JUNCTION BOX
M HP, V, Ø	MOTOR CONNECTION, HORSEPOWER, VOLTAGE, AND PHASE AS INDICATED
30/3/NF/12	DISCONNECT SWITCH - NOMENCLATURE AS FOLLOWS - SIZE/POLES/FUSE SIZE/NEMA RATING
FVNR/SIZE1/1	COMBINATION MOTOR STARTER - TYPE/SIZE/NEMA ENCLOSURE AS INDICATED.

Height	Description
10'-0"	BATTERY LIGHTING UNITS AND REMOTE WALL MIOUNTED LIGHTING UNIT (OR 1'-0" BELOW FINISHED CEILING OF TOP UNIT)
CENTER ABOVE DOOR OR WINDOW OPENING	WARNING AND SIGNALING FIXTURES/SIGNS
6'-6"	TOP OF FLUSH AND SURFACE MOUNTED ELECTRICAL LIGHTING OR POWER PANELBOARDS
6'-3"	TOP OF BACK-MOUNTED WALL EXIT FIXTURES (NOT MOUNTED ABOVE DOORS)
6'-0"	TOP OF HIGHEST ELECTRICAL SAFETY DISCONNECT SWITCHES, MAGNETIC STARTERS, CONTACTORS
4'-6"	CENTERLINE OF OPERATING HANDLE FOR WALL MOUNTED DISCONNECT SWITCHES AND MOTOR STARTERS;
3'-8"	WALL PHONE, ELECTRICAL DEVICE LIGHTING SWITCHES, MANUAL MOTOR STARTERS, SECURITY CARD, AND GFI RECEPTACLES IN TOILET ROOMS OR FOR SEPERATE SINKS NOT IN CASEWORK
2'-0"	ELECTRICAL RECEPTACLES IN MECHANICAL, ELECTRICAL AND ELEVATOR ROOMS
1'-6"	ELECTRICAL RECEPTACLES, TELEPHONE OUTLETS, DATA OUTLETS, DATA/TELEPHONE OUTLETS
0'-0"	FINISHED FLOOR

1 ELECTRICAL DEVICE MOUNTING HEIGHTS

NOTES:
1. THE ABOVE MOUNTING HEIGHTS SHALL BE ADHERED TO UNLESS SPECIFICALLY NOTED OR DETAILED OTHERWISE ON THE DRAWINGS OR SPECIFICATIONS.
2. MOUNTING HEIGHTS TO CENTER OF OUTLETS UNLESS OTHERWISE NOTED. IN MASONRY CONSTRUCTION THE ABOVE MOUNTING HEIGHTS SHALL BE USED FOR REFERENCE TO NEAREST BLOCK OF BRICK COURSING.
3. CONFIRM DEVICES MOUNTED ABOVE COUNTER OR CASEWORK. COORDINATE WITH A RCHITECTURAL ROOM ELEVATIONS, DETAILS AND CASEWORK CONTRACTOR.

Height	Description
9" BELOW FINISHED CLG	WALL MOUNTED FIRE ALARM SOUNDING DEVICE
6'-8"	FIRE ALARM STROBES MOUNTED AT 6'-8" OR 6" BELOW FINISHED CEILING (WHICHEVER IS LOWER)
6'-6"	TOP OF FLUSH MOUNTED OR SURFACE MOUNTED FIRE ALARM ANNUNCIATOR PANEL AND FIRE ALARM CONTROL PANEL
4'-0"	MANUAL FIRE ALARM PULL STATION
0'-0"	FINISHED FLOOR

2 FIRE ALARM DEVICE MOUNTING HEIGHTS

NOTES:
1. THE ABOVE MOUNTING HEIGHTS SHALL BE ADHERED TO UNLESS SPECIFICALLY NOTED OR DETAILED OTHERWISE ON THE DRAWINGS OR SPECIFICATIONS.

SINGLE LINE DIAGRAM SYMBOL		
SYMBOL	DESCRIPTION	FURNISHED BY
M	KILOWATT-HOUR/ DEMAND METER	BY UTILITY COMPANY
KWH KWD	KILOWATT-HOUR/ DEMAND METER	BY EC
	CURRENT TRANSFORMER	BY EC
	POTENTIAL TRANSFORMER	BY EC
C A B	WYE CONNECTION	BY EC
A C B	DELTA CONNECTION	BY EC
	TRANSFORMER	BY EC
3P 100AT 100AF	CIRCUIT BREAKER (POLES, AMP TRIP, AMP FRAME)	BY EC
	FUSE	BY EC
	FUSE CUTOUT/ LOADBREAK FUSE SWITCH	BY EC
	COMBINATION MOTOR STARTER & FUSE DISCONNECT SWTICH	BY EC
PANEL 'PP1' — DESIGNATION; 100A BUS — BUS RATING; 100A MCB — MLO/MCB SIZE; 120/208V — VOLTAGE; 3Ø,4W — PHASE, WIRE; 42 POLE — POLE QUANTITY	PANELBOARD	BY EC
MS	MOTOR STARTER	BY MC
VFD	VARIABLE FREQUENCY DRIVE	BY MC
	DISCONNECT SWITCH	BY EC
M	MOTOR (HORSEPOWER AS INDICATED)	BY EQUIPMENT SUPPLIER
500Y	FEEDER DESIGNATION	BY EC

SUSTAINABLE
PLANNING
ARCHITECTURE
INTERIOR DESIGN
OLSENDESIGNGROUP
ARCHITECTS
2345 Bernville Road
Reading, PA 19605
610.371.9606
Fax 610.371.9607
www.odgarchitects.com

COPYRIGHT © 2014
ALL RIGHTS RESERVED, NEITHER ALL NOR ANY PART OF THIS DOCUMENT MAY BE AMENDED, REPRODUCED, COPIED OR USED IN ANY FORM OR MANNER EXCEPT PURSUANT TO CONTRACT WITH OR WITH THE SPECIFIC WRITTEN PERMISSION OF Olsen Design Group Architects, Inc.
PROPERTY RIGHTS ARE EXPRESSLY RESERVED BY Olsen Design Group Architects, Inc.

Multani Associates, Inc.
955 Penn Avenue
Wyomissing, PA 19610
610-374-0821 (FAX) 610-374-7071

Wanko + Mitten Energy Systems
508 Chestnut Streer
Hamburg, PA 19526
610-914-1980 (FAX)

Renovations to
Recycling Center Baler Facility for
The City of Reading
Hill Road
Reading, Berks County, PA

	Date	Activities	Dwg By	Chk By
	7/8/14	ISSUE FOR BIDDING	BRM	BRM

Revisions:

Drawing Title:
ELECTRICAL INFORMATION SHEET

Project No: WMES14011
Scale: AS NOTED
Drawn By: BRM
Contract Date:
Checked By: BRM
Last Update: 07/08/14
Seal:
Drawing No: E-0.01

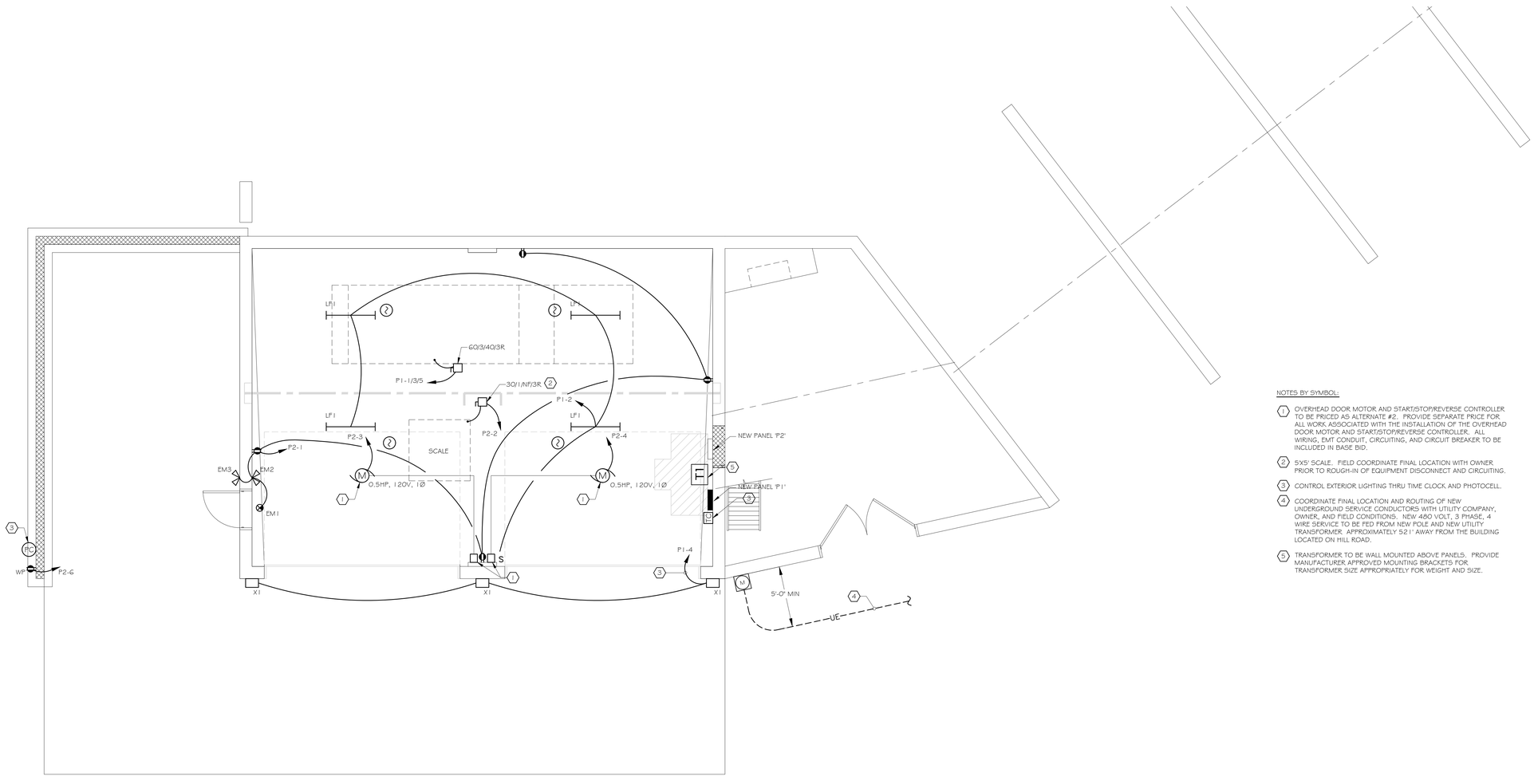

1 ELECTRICAL – NEW WORK POWER/LIGHTING PLAN
SCALE: 1/4" = 1'-0"

NOTES BY SYMBOL:

1. OVERHEAD DOOR MOTOR AND START/STOP/REVERSE CONTROLLER TO BE PRICED AS ALTERNATE #2. PROVIDE SEPARATE PRICE FOR ALL WORK ASSOCIATED WITH THE INSTALLATION OF THE OVERHEAD DOOR MOTOR AND START/STOP/REVERSE CONTROLLER. ALL WIRING, EMT CONDUIT, CIRCUITING, AND CIRCUIT BREAKER TO BE INCLUDED IN BASE BID.
2. 5'X5' SCALE. FIELD COORDINATE FINAL LOCATION WITH OWNER PRIOR TO ROUGH-IN OF EQUIPMENT DISCONNECT AND CIRCUITING.
3. CONTROL EXTERIOR LIGHTING THRU TIME CLOCK AND PHOTOCELL.
4. COORDINATE FINAL LOCATION AND ROUTING OF NEW UNDERGROUND SERVICE CONDUCTORS WITH UTILITY COMPANY, OWNER, AND FIELD CONDITIONS. NEW 480 VOLT, 3 PHASE, 4 WIRE SERVICE TO BE FED FROM NEW POLE AND NEW UTILITY TRANSFORMER APPROXIMATELY 521' AWAY FROM THE BUILDING LOCATED ON HILL ROAD.
5. TRANSFORMER TO BE WALL MOUNTED ABOVE PANELS. PROVIDE MANUFACTURER APPROVED MOUNTING BRACKETS FOR TRANSFORMER SIZE APPROPRIATELY FOR WEIGHT AND SIZE.

SUSTAINABLE
PLANNING
ARCHITECTURE
INTERIOR DESIGN

OLSENDESIGNGROUP
ARCHITECTS

2345 Bernville Road
Reading, PA 19605
610.371.9606
Fax 610.371.9607
www.odgarchitects.com

COPYRIGHT © 2014
ALL RIGHTS RESERVED, NEITHER ALL NOR ANY PART OF THIS DOCUMENT MAY BE AMENDED, REPRODUCED, COPIED OR USED IN ANY FORM OR MANNER EXCEPT PURSUANT TO CONTRACT WITH OR WITH THE SPECIFIC WRITTEN PERMISSION OF Olsen Design Group Architects, Inc.
PROPERTY RIGHTS ARE EXPRESSLY RESERVED BY Olsen Design Group Architects, Inc.

Multani Associates, Inc.
955 Penn Avenue
Wyomissing, PA 19610
610-374-0821 (FAX) 610-374-7071

Wanko + Mitten Energy Systems
508 Chestnut Streer
Hamburg, PA 19526
610-914-1980 (FAX)

Renovations to
Recycling Center Baler Facility for
The City of Reading
Hill Road
Reading, Berks County, PA

Date	Activities	Dwg By	Chk By
7/8/14	ISSUE FOR BIDDING	BRM	BRM

Revisions:

Drawing Title:
ELECTRICAL FLOOR PLAN
POWER/LIGHTING

Project No: WMES14011	**Scale:** AS NOTED
Drawn By: BRM	**Contract Date:**
Checked By: BRM	**Last Update:** 07/08/14
Seal:	**Drawing No:** E-2.01

PANEL: P1 BUS AMP: 100 AMPS MAIN BREAKER: 100 MCB
MOUNTING: SURFACE PHASE: 3 WIRE: 4 VOLTAGE: 480Y277 AIC: 22,000

CKT	CIRCUIT DESCRIPTION	BREAKER P	BREAKER AMP	WIRE NO	WIRE SIZE	GND SIZE	COND	KVA/PH A	KVA/PH B	KVA/PH C	KVA/PH A	KVA/PH B	KVA/PH C	COND	GND SIZE	WIRE SIZE	WIRE NO	BREAKER AMP	BREAKER P	CIRCUIT DESCRIPTION	CKT
1								7.5			0.4			3/4	12	12	2	20	1	LIGHTING	2
3	BALER	3	60	4	6	10	1		7.5			0.5		3/4	12	12	2	20	1	EXTERIOR LIGHTING	4
5										7.5								20	1	SPARE	6
7	SPARE	1	20								2.9			3/4	10	8	3	40	3	TRANSFORMER "T1"	8
9	SPARE	1	20									2.0									10
11	SPARE	1	20																1	SPACE/PROVISIONS	12
13	SPACE/PROVISIONS	1																	1	SPACE/PROVISIONS	14
15	SPACE/PROVISIONS	1																	1	SPACE/PROVISIONS	16
17	SPACE/PROVISIONS	1																	1	SPACE/PROVISIONS	18
19	SPACE/PROVISIONS	1																	1	SPACE/PROVISIONS	20
21	SPACE/PROVISIONS	1																	1	SPACE/PROVISIONS	22
23	SPACE/PROVISIONS	1																	1	SPACE/PROVISIONS	24
25	SPACE/PROVISIONS	1																	1	SPACE/PROVISIONS	26
27	SPACE/PROVISIONS	1																	1	SPACE/PROVISIONS	28
29	SPACE/PROVISIONS	1																	1	SPACE/PROVISIONS	30
							TOTALS	7.5	7.5	7.5	3.3	2.5	###								
								PANEL TOTALS			10.8	10.0	7.5								

PANEL: P2 BUS AMP: 100 AMPS MAIN BREAKER: 80 MCB
MOUNTING: SURFACE PHASE: 1 WIRE: 3 VOLTAGE: 240/120 AIC: 10,000

CKT	CIRCUIT DESCRIPTION	BREAKER P	BREAKER AMP	WIRE NO	WIRE SIZE	GND SIZE	COND	KVA/PH A	KVA/PH B	KVA/PH A	KVA/PH B	COND	GND SIZE	WIRE SIZE	WIRE NO	BREAKER AMP	BREAKER P	CIRCUIT DESCRIPTION	CKT
1	RECEPTACLES	1	20	2	12	12	3/4	0.8		1.9		3/4	12	12	2	20	1	SCALE	2
3	OVERHEAD DOOR	1	20	2	12	12	3/4		1.0		1.0	3/4	12	12	2	20	1	OVERHEAD DOOR	4
5	SPARE	1	20							0.2		3/4	12	12	2	20	1	EXTERIOR REC	6
7	SPARE	1	20													20	1	SPARE	8
9	SPARE	1	20													20	1	SPARE	10
11	SPARE	1	20													20	1	SPARE	12
13	SPACE/PROVISIONS	1															1	SPACE/PROVISIONS	14
15	SPACE/PROVISIONS	1															1	SPACE/PROVISIONS	16
17	SPACE/PROVISIONS	1															1	SPACE/PROVISIONS	18
19	SPACE/PROVISIONS	1															1	SPACE/PROVISIONS	20
21	SPACE/PROVISIONS	1															1	SPACE/PROVISIONS	22
23	SPACE/PROVISIONS	1															1	SPACE/PROVISIONS	24
25	SPACE/PROVISIONS	1															1	SPACE/PROVISIONS	26
27	SPACE/PROVISIONS	1															1	SPACE/PROVISIONS	28
29	SPACE/PROVISIONS	1															1	SPACE/PROVISIONS	30
							TOTALS	0.8	1.0	2.1	1.0								
								PANEL TOTALS		2.9	2.0								

LIGHTING FIXTURE SCHEDULE - LINEAR FLUORESCENT

FIXTURE ID	FIXTURE SYMBOL NORMAL	FIXTURE SYMBOL EMERGENCY	FIXTURE TYPE MANUFACTURER	NORMAL MODEL #	EMERGENCY MODEL #	DESCRIPTION	LAMP QUANTITY	LAMP TYPE	LAMP WATTAGE	CCT	CRI	MOUNTING	FIXTURE VOLTAGE	REMARKS
LF1		N.A.	LITHONIA	DMW 3 32 MVOLT GEB101S	N.A.	ENCLOSED GASKETED INDUSTRIAL FIXTURE WITH ACRYLIC DIFFUSER, 3 LAMP, T8 BULB, 32 WATT	3	T8	32W	4100	85	SURFACE MTD	MVOLT	PROVIDE WITH COLD WEATHER BALLAST

LIGHTING FIXTURE SCHEDULE - EXTRIOR

FIXTURE ID	FIXTURE SYMBOL NORMAL	FIXTURE SYMBOL EMERGENCY	FIXTURE TYPE MANUFACTURER	NORMAL MODEL #	EMERGENCY MODEL #	DESCRIPTION	LAMP QUANTITY	LAMP TYPE	LAMP WATTAGE	CCT	CRI	MOUNTING	FIXTURE VOLTAGE	REMARKS
X1		N.A.	LITHONIA	TWRIC 150M 277 LPI	N.A.	CUTOFF WALL PACK, 150 WATT, METAL HALIDE LAMP,	1	MH	150				MVOLT	PROVIDE COLD-WEATHER BALLAST

LIGHTING FIXTURE SCHEDULE - EMERGENCY LIGHTING

FIXTURE ID	FIXTURE SYMBOL	FIXTURE TYPE MANUFACTURER	EMERGENCY MODEL #	DESCRIPTION	LAMP QUANTITY	LAMP TYPE	LAMP WATTAGE	CCT	CRI	MOUNTING	FIXTURE VOLTAGE	REMARKS
EM1		LITHONIA	LQM 5 W 3 R 120/277	THERMOPLASTIC LED EXIT SIGN, SINGLE OR DOUBLE FACE AS INDICATED ON PLANS, NICKEL-CADNMIUM BATTERY BACK-UP	-	LED	1.0	-	-	CEILING	120/277	
EM2		LITHONIA	ELM2	TWIN HEAD, ADJUSTABLE LAMP, THERMOPLASTIC, 12 VOLT, 9W KRYPTON LAMPS, NICKEL-CADNMIUM BATTERY BACK-UP	2	KRYPTON	9	-	-	WALL	120/277	
EM3		LITHONIA	ELAT GC5 WP M12	TWIN HEAD, ADJUSTABLE LAMP, WEATHERPROOF REMOTE HEAD, 5.4 WATT	3	KRYPTON	5.4	-	-	WALL	120/277	

LIGHTING FIXTURE SCHEDULES GENERAL NOTES

L-1 FIXTURES, LAMPS, AND RELATED DEVICES FURNISHED UNDER THIS CONTRACT SHALL CARRY THE APPROVAL LABEL OF U.L. OR E.T.L. FOR THE SPECIFIC APPLICATION IN WHICH THEY ARE USED.

L-2 UNLESS OTHERWISE NOTED, LAMP DESIGNATIONS ARE FOR LAMPS BY PHILIPS LIGHTING COMPANY. LAMPS OF EQUIVALENT CHARACTERISTICS WITH EQUAL OR GREATER PERFORMANCE FROM GENERAL ELECTRIC OR OSRAM/SYLVANIA ARE ACCEPTABLE ALTERNATIVES.

L-3 CONTRACTOR SHALL CONFIRM THAT FIXTURE VOLTAGE AND FIXTURE CEILING TRIMS ARE COMPATIBLE WITH THEIR APPLICATION PRIOR TO ORDERING FIXTURES.

L-4 CONTRACTOR SHALL SELECT, FURNISH, AND INSTALL THE CORRECT SIZE OF SECONDARY WIRING FROM REMOTE TRANSFORMERS AND/OR REMOTE BALLASTS AS REQUIRED TO KEEP VOLTAGE DROP IN THE SECONDARY WIRING BELOW 3% OF RATED VOLTAGE.

TRANSFORMER SCHEDULE

TRANSFORMER SYMBOL	TRANSFORMER KVA	B.O.D. MANUFACTURER & MODEL #	PRIMARY VOLTAGE	PRIMARY AMPERAGE	PRIMARY OCP	SECONDARY VOLTAGE	SECONDARY AMPERAGE	SECONDARY OCP	BONDING AND ELECTRODE CONDUCTOR	REMARKS
T1	15	SQUARE D, EE15S3H	480	31.3	40	240/120	62.5	80	#8 AWG IN 3/4" CONDUIT	

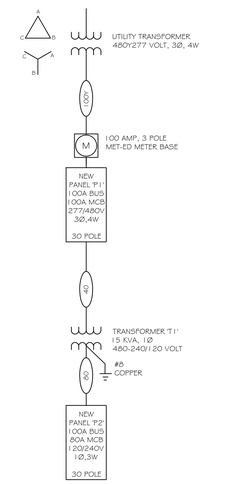

1 ELECTRICAL SINGLE LINE DIAGRAM

COPPER WIRING FEEDER SCHEDULE

AMP RATING	FEEDER TAG	CONDUCTOR	RACEWAY SIZE
60	60	2 #6 AWG + 1 #6 AWG NEUTRAL + 1 #10 AWG GROUND	1"
70	70	2 #4 AWG + 1 # 4AWG NEUTRAL + 1 #8 AWG GROUND	1 1/2"
100	100	2 #1 AWG + 1 #1 AWG NEUTRAL + 1 #8 AWG GROUND	1 1/2"
125	125	2 #1/0 AWG + 1 #1/0 AWG NEUTRAL + 1 #6 AWG GROUND	2"

NOTES:

1. ALL AMPACITIES ARE BASED ON 75°C TEMPERATURE RATING OF CONDUCTORS AS INDICATED IN THE NATIONAL ELECTRIC CODE.
2. FEEDERS MAY HAVE A COMBINATION OF OVERSIZED NEUTRAL AND ISOLATED GROUND. REFER TO SINGLE LINE DIAGRAM FOR FEEDER TYPES.

VOLTAGE DROP SCHEDULE

120 VOLT	
WIRE SIZE	CONDUIT/FEEDER LENGTH
#12 AWG	0'-1" TO 65'-0"
#10 AWG	65'-1" TO 120'-0"
#8 AWG	120'-1" TO 180'-0"
#6 AWG	180'-1" AND ABOVE

SUSTAINABLE PLANNING ARCHITECTURE INTERIOR DESIGN
OLSENDESIGNGROUP ARCHITECTS
2345 Bernville Road
Reading, PA 19605
610.371.9606
Fax 610.371.9607
www.odgarchitects.com

COPYRIGHT © 2014
ALL RIGHTS RESERVED, NEITHER ALL NOR ANY PART OF THIS DOCUMENT MAY BE AMENDED, REPRODUCED, COPIED OR USED IN ANY FORM OR MANNER EXCEPT PURSUANT TO CONTRACT WITH OR WITH THE SPECIFIC WRITTEN PERMISSION OF Olsen Design Group Architects, Inc.
PROPERTY RIGHTS ARE EXPRESSLY RESERVED BY Olsen Design Group Architects, Inc.

Multani Associates, Inc.
955 Penn Avenue
Wyomissing, PA 19610
610-374-0821 (FAX) 610-374-7071

Wanko + Mitten Energy Systems
508 Chestnut Streer
Hamburg, PA 19526
610-914-1980 (FAX)

Renovations to Recycling Center Baler Facility for
The City of Reading
Hill Road
Reading, Berks County, PA

	Date	Activities	Dwg By	Chk By
	7/8/14	ISSUE FOR BIDDING	BRM	BRM

Revisions:

Drawing Title:
ELECTRICAL SCHEDULES AND SINGLE LINE DIAGRAM

Project No: WMES14011
Scale: AS NOTED
Drawn By: BRM
Contract Date:
Checked By: BRM
Last Update: 07/08/14
Seal:
Drawing No: E-6.01

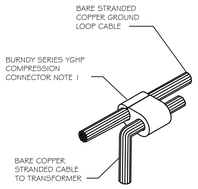

1 TYPICAL CABLE TO CABLE DETAIL

NOTES:

1. COORDINATE CONNECTOR SIZE WITH CABLES BEING CONNECTED.

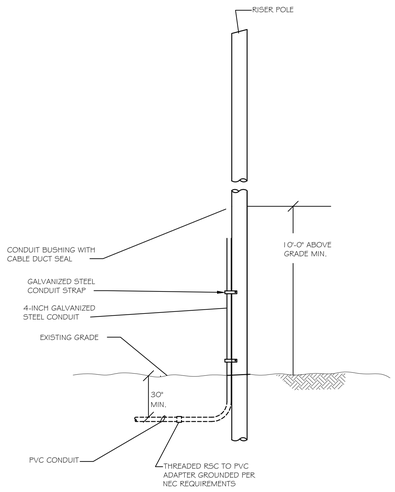

2 ELECTRICAL SERVICE RISER POLE DETAIL

NOTE:

1) GROUND RIGID STEEL CONDUIT AS REQUIRED PER NEC.

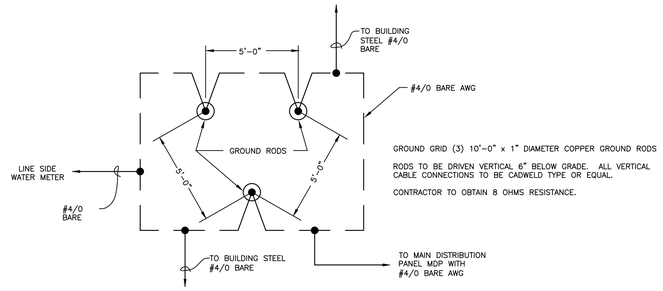

GROUND GRID (3) 10'-0" x 1" DIAMETER COPPER GROUND RODS

RODS TO BE DRIVEN VERTICAL 6" BELOW GRADE. ALL VERTICAL CABLE CONNECTIONS TO BE CADWELD TYPE OR EQUAL.

CONTRACTOR TO OBTAIN 8 OHMS RESISTANCE.

3 GROUNDING GRID DETAIL

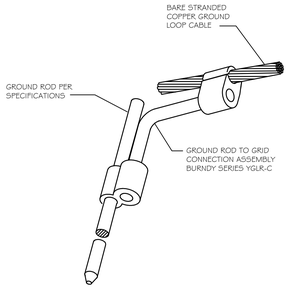

4 TYPICAL CABLE TO GROUNDING ROD DETAIL

NOTES:

1. COORDINATE CONNECTOR SIZE WITH GROUND CONDUCTOR BEING CONNECTED TO.

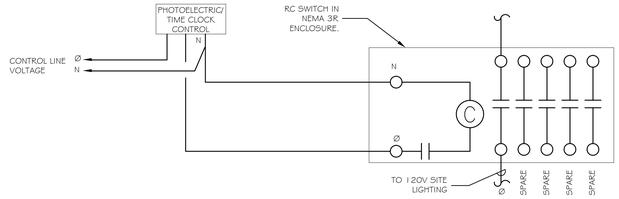

5 SITE LIGHTING CONTROL DETAIL

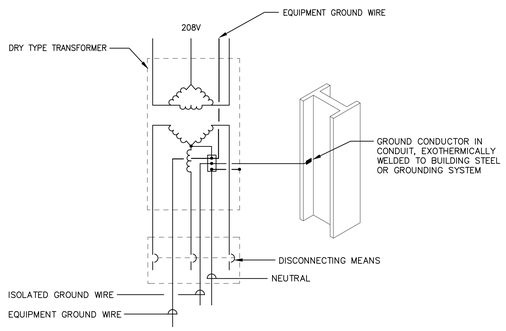

6 TRANSFORMER GROUNDING DETAIL

SUSTAINABLE
PLANNING
ARCHITECTURE
INTERIOR DESIGN

OLSENDESIGNGROUP
ARCHITECTS

2345 Bernville Road
Reading, PA 19605
610.371.9606
Fax 610.371.9607
www.odgarchitects.com

COPYRIGHT © 2014

ALL RIGHTS RESERVED, NEITHER ALL NOR ANY PART OF THIS DOCUMENT MAY BE AMENDED, REPRODUCED, COPIED OR USED IN ANY FORM OR MANNER EXCEPT PURSUANT TO CONTRACT WITH OR WITH THE SPECIFIC WRITTEN PERMISSION OF Olsen Design Group Architects, Inc.
PROPERTY RIGHTS ARE EXPRESSLY RESERVED BY Olsen Design Group Architects, Inc.

Multani Associates, Inc.
955 Penn Avenue
Wyomissing, PA 19610
610-374-0821 (FAX) 610-374-7071

Wanko + Mitten Energy Systems
508 Chestnut Streer
Hamburg, PA 19526
610-914-1980 (FAX)

Renovations to
Recycling Center Baler Facility for
The City of Reading
Hill Road
Reading, Berks County, PA

Date	Activities	Dwg By	Chk By
7/8/14	ISSUE FOR BIDDING	BRM	BRM

Revisions:

Drawing Title:
ELECTRICAL DETAILS

Project No: WMES14011	**Scale:** AS NOTED
Drawn By: BRM	**Contract Date:**
Checked By: BRM	**Last Update:** 07/08/14
Seal:	**Drawing No:** E-8.01

DRAWING SPECIFICATIONS - ELECTRICAL (DIVISION 16)

SECTION 16001 - SCOPE OF WORK

1. PROVIDE ALL LABOR, MATERIAL, EQUIPMENT AND SERVICES FOR THE PROPER INSTALLATION AND OPERATION OF THE ELECTRICAL WORK AS INDICATED ON THE DRAWINGS.

2. REMOVE OR RELOCATE EXISTING ELECTRICAL EQUIPMENT AS REQUIRED BY THE PROJECT.

3. TEST AND OPERATE ALL SYSTEMS TO DEMONSTRATE TO THE OWNER THAT THE INSTALLATION OF THESE SYSTEMS CONFORM TO DESIGN INTENT.

SECTION 16050- BASIC ELECTRICAL REQUIREMENTS

1. COMPLY WITH ALL RULES AND REGULATIONS OF THE OWNER, ALL LOCAL, STATE AND FEDERAL LAWS, THE RULES OF THE NATIONAL FIRE PROTECTION ASSOCIATION (INCLUDING THE NEC), THE OWNER'S UNDERWRITER, AND ALL PUBLIC UTILITIES HAVING CONNECTION WITH ANY OF THE AFFECTED SYSTEMS. ALL EQUIPMENT SHALL BE UL LABELED.

2. OBTAIN, PAY FOR AND DELIVER ALL PERMITS, CERTIFICATES OF INSPECTION, AND PAY ALL COSTS, REQUIRED BY THE AUTHORITIES HAVING JURISDICTION. DELIVER ALL PERMITS, CERTIFICATES AND APPROVALS TO THE ENGINEER PRIOR TO FINAL ACCEPTANCE OF THE WORK.

3. ASSIST OWNER IN APPLYING FOR SERVICE FROM THE ELECTRIC UTILITY COMPANY AND SCHEDULE THEIR WORK IN COORDINATION WITH THE PROJECT.

4. FURNISH INDEPENDENT INSPECTION AGENCY CERTIFICATES FOR ALL ELECTRICAL WORK. ALL CERTIFICATES SHALL BE IN DUPLICATE AND SHALL BE DELIVERED TO THE ENGINEER AND SHALL BECOME THE PROPERTY OF THE OWNER.

5. VERIFY ALL EXISTING CONDITIONS IN THE FIELD BEFORE SUBMITTING A BID. NO ALLOWANCE WILL BE MADE FOR EXTRA COSTS ARISING FROM FAILURE TO DO SO.

6. IT IS THE INTENTION OF THE DRAWINGS AND SPECIFICATIONS TO CALL FOR CLEAR FINISHED WORK, TESTED AND READY FOR OPERATION. PROVIDE ALL INCIDENTAL ACCESSORIES NECESSARY TO MAKE THE WORK COMPLETE IN ALL RESPECTS AND READY FOR OPERATION, EVEN IF NOT PARTICULARLY SPECIFIED OR SHOWN, WITHOUT ADDITIONAL EXPENSE. MINOR DETAILS NOT USUALLY SHOWN OR SPECIFIED, BUT MANIFESTLY NECESSARY FOR THE PROPER INSTALLATION AND OPERATION OF THE VARIOUS SYSTEMS, SHALL BE INCLUDED IN THE WORK.

7. SUBMIT 7 COPIES OF SHOP DRAWINGS. SHOP DRAWINGS SHALL INCLUDE PLANS, ELEVATIONS, SECTIONS, MOUNTING DETAILS OF COMPONENT PARTS, POINT TO POINT INTERCONNECTION DIAGRAMS, ELEMENTARY DIAGRAMS, SINGLE LINE DIAGRAMS AND ANY OTHER DRAWINGS NECESSARY TO SHOW THE FABRICATION AND CONNECTION OF THE COMPLETE ITEM OR SYSTEM.

8. KEEP RECORD DRAWINGS IN THE JOB SITE OFFICE. MAINTAIN RECORD DRAWINGS DAILY AND MAKE THEM AVAILABLE FOR INSPECTION BY THE OWNER OR ENGINEER UPON DEMAND. AT THE COMPLETION OF THE PROJECT, BIND THE PRINTS INTO A SET AND FORWARD THEM TO THE ENGINEER. THE RECORD DRAWINGS SHALL CONSIST OF A SEPARATE SET OF WHITE PRINTS OF THE CONTRACT DRAWINGS ON WHICH SHALL BE RECORDED IN INK OR COLORED PENCIL THE FOLLOWING:

A. DIMENSIONED LOCATIONS OF CONDUITS BURIED BELOW, OR CAST INTO, CONCRETE FLOOR SLABS.

B. LIGHTING FIXTURE ARRANGEMENTS, IF DIFFERENT FROM CONTRACT DRAWINGS.

C. LOCATIONS OF ELECTRIC PANELS, MOTOR STARTERS, AND OTHER WALL MOUNTED EQUIPMENT, IF DIFFERENT FROM CONTRACT DRAWINGS.

D. ALL WORK ADDED TO THE CONTRACT BY FIELD SKETCHES, ADDENDUM OR CHANGE ORDER.

9. BEFORE COMPLETION OF THE INSTALLATION, FURNISH THREE COPIES OF MANUALS COVERING IN DETAIL ALL REQUIRED INSTRUCTIONS FOR THE OPERATION OF THE SYSTEMS PROVIDED.

10. FURNISH ALL LABOR REQUIRED BY THE ENGINEER, OR INSPECTION AGENCIES TO EXAMINE THE WORK DURING THE COURSE OF CONSTRUCTION.

11. FURNISH A WRITTEN WARRANTY FOR THE INSTALLATION, STATING THAT ALL MATERIALS AND EQUIPMENT AND THE SYSTEMS WHICH THEY COMPRISE ARE FREE FROM DEFECTS OR FLAWS IN WORKMANSHIP OR OPERATION, AND ARE FUNCTIONING PROPERLY AND CAPABLE OF PROVIDING SATISFACTORY OPERATION IN ACCORDANCE WITH DESIGN INTENT. REPAIR OR REPLACE ANY DEFECTIVE WORKMANSHIP, DEFECTIVE MATERIALS OR EQUIPMENT, OR CORRECT UNSATISFACTORY PERFORMANCE, WITHOUT EXPENSE TO THE OWNER. MAKE REPAIRS OR REPLACEMENTS PROMPTLY AND AT THE CONVENIENCE OF THE OWNER. THE WARRANTY SHALL BE IN EFFECT FOR A PERIOD OF ONE YEAR FROM DATE OF ACCEPTANCE OF THE SYSTEMS AS A WHOLE.

12. MATERIAL OR EQUIPMENT SPECIFIED BY MANUFACTURER, BRAND NAME, TYPE OR CATALOG NUMBER, ARE DESIGNED TO ESTABLISH STANDARDS OF DESIRED QUALITY, PERFORMANCE, DIMENSIONS AND OTHER CHARACTERISTICS. SUBSTITUTIONS WILL NOT BE PERMITTED WITHOUT THE WRITTEN APPROVAL OF THE ENGINEER. WHERE ANY SUBSTITUTION REQUIRES REDESIGN OR RELOCATION OF THE STRUCTURES, PIPING, RACEWAYS, WIRING OR ANY OTHER PART OF THE ELECTRICAL, MECHANICAL, OR ARCHITECTURAL WORK, ALL REDESIGN SHALL BE PREPARED BY THE CONTRACTOR AT HIS OWN EXPENSE AND SUBMITTED FOR THE APPROVAL OF THE ENGINEER. ALL ADDITIONAL WORK MADE NECESSARY BY THE SUBSTITUTION SHALL BE PROVIDED WITHOUT EXTRA COST.

13. UPON REQUEST, PROVIDE COPIES OF MATERIAL SAFETY DATA SHEETS (MSDS) FOR ANY MATERIALS USED IN THE WORK AND NOT SUPPLIED BY THE OWNER. MSDS SHEETS SHALL BE PROVIDED BEFORE DELIVERY OF MATERIALS TO THE JOB SITE.

14. ALL WORK SHALL BE PERFORMED BY WORKMEN SKILLED IN THE TRADE. ALL WORKMANSHIP SHALL PRESENT A NEAT AND FINISHED APPEARANCE. COMPLY WITH NECA RULES WHEREVER POSSIBLE.

15. PROTECT THE BUILDING, ITS CONTENTS AND ALL NEW WORK AGAINST DAMAGE FROM ANY SOURCE UNTIL FINAL COMPLETION AND ACCEPTANCE BY THE OWNER. REPAIR OR REPLACE ANY DAMAGED WORK AT NO COST TO THE OWNER.

16. AT ALL TIMES, KEEP THE PREMISES FREE FROM ACCUMULATION OF WASTE MATERIAL AND RUBBISH.

17. GIVE FIVE DAYS NOTICE TO THE OWNER FOR ANY WORK WHICH WILL INTERRUPT MECHANICAL OR ELECTRICAL SERVICES. ANY INTERRUPTIONS SHALL BE REVIEWED, SCHEDULED AND APPROVED BY THE OWNER. DO NOT PERFORM THE WORK WITHOUT APPROVAL OF THE OWNER. DURING PARTIAL OR FULL OCCUPANCY OF THE FACILITY, ALL WORK SHALL BE SCHEDULED AND COORDINATED WITH THE OWNER SO THAT DISRUPTION TO THE AREAS INVOLVED IS KEPT TO A MINIMUM. ANY ACCIDENTAL INTERRUPTIONS TO SERVICES SHALL BE REPAIRED IMMEDIATELY BY THE CONTRACTOR WITHOUT ADDITIONAL COST TO THE OWNER.

18. PROVIDE ALL RIGGING, SCAFFOLDING, LADDERS, AND OTHER EQUIPMENT REQUIRED FOR THE INSTALLATION OF THE WORK.

19. ESTABLISH CLEARANCES REQUIRED TO DELIVER AND INSTALL ALL EQUIPMENT. IF STRUCTURES OR EQUIPMENT MUST BE ALTERED TO PROVIDE PASSAGE, RESTORE STRUCTURES, EQUIPMENT AND SYSTEMS TO THEIR ORIGINAL CONDITION.

20. MAKE A COMPLETE INSPECTION OF ALL THE ELECTRICAL WORK AFTER COMPLETION OF THE PROJECT. PERFORM TESTS IN COMPLIANCE WITH EACH EQUIPMENT MANUFACTURER'S TEST PROCEDURES AND THE ACCEPTANCE TEST STANDARDS OF THE INTERNATIONAL ELECTRICAL TESTING ASSOCIATION (NETA). PROVIDE ALL INSTRUMENTS, METERS, WIRING, PERSONNEL, ETC., REQUIRED FOR TESTING.

21. AFTER ALL ADJUSTMENTS AND TESTS HAVE BEEN COMPLETED, CLEAN ALL PARTS OF THE INSTALLATION, INCLUDING INTERIORS OF BOXES, CABINETS AND EQUIPMENT ENCLOSURES. CLEAN LIGHTING FIXTURE LENSES AND REFLECTORS WITH ANTI-STATIC DETERGENT TO ENSURE RATED OUTPUT.

22. PROVIDE THE SERVICES OF MANUFACTURER'S REPRESENTATIVES TO SUPERVISE INSTALLATION, FINAL CONNECTIONS AND TESTING. MANUFACTURER'S REPRESENTATIVES WILL GIVE THE OWNER FULL INSTRUCTIONS AND DEMONSTRATIONS IN THE OPERATION AND MAINTENANCE OF ALL ELECTRICAL SYSTEMS AND EQUIPMENT.

SECTION 16110 - CONDUIT SYSTEMS

1. INSTALL ALL WIRE AND CABLES IN ELECTRICAL METALLIC TUBING UNLESS OTHERWISE SPECIFIED OR INDICATED BY THE DRAWINGS. ELECTRICAL METALLIC TUBING (EMT) SHALL BE GALVANIZED STEEL IN ACCORDANCE WITH FS WWC 563, ANSI C80.3 AND UL 797. FITTINGS 1-1/4-INCH AND SMALLER SHALL BE COMPRESSION TYPE AND 1-1/2-INCH AND LARGER SHALL BE SET SCREW TYPE. ALL FITTINGS SHALL BE OF WROUGHT STEEL CONSTRUCTION.

2. RIGID ALUMINUM CONDUIT WITH THREADED FITTINGS SHALL BE USED FOR ALL CONDUIT INSTALLATIONS EXPOSED TO THE WEATHER. RIGID ALUMINUM CONDUIT SHALL BE 6063 ALLOY, T41 TEMPER, CONFORMING TO FS WWC 540, ANSI C80.5 AND UL 6. FITTINGS SHALL BE THREADED TYPE OF ALUMINUM CONSTRUCTION.

3. LIQUID-TIGHT FLEXIBLE METALLIC CONDUIT SHALL BE USED FOR CONNECTION TO MOTORS AND OTHER EQUIPMENT WHICH PRODUCES OR TRANSMITS VIBRATION OR NOISE, UNLESS THE MOTORS OR EQUIPMENT ARE MOUNTED ABOVE SUSPENDED CEILING. PROVIDE SUITABLE BONDING JUMPER FOR ALL CONNECTIONS. LIQUID-TIGHT FLEXIBLE METAL CONDUIT SHALL BE CONSTRUCTED OF SINGLE STRIP, FLEXIBLE, CONTINUOUS, INTERLOCKED AND DOUBLE-WRAPPED STEEL, GALVANIZED INSIDE AND OUTSIDE AND COATED WITH LIQUID-TIGHT JACKET OF FLEXIBLE POLYVINYL CHLORIDE (PVC). FITTINGS SHALL BE LIQUID-TIGHT COMPRESSION TYPE.

4. RIGID STEEL CONDUIT SHALL BE USED WHERE CONDUIT IS ENCASED IN THE BUILDING'S POURED CONCRETE CONSTRUCTION. RIGID STEEL CONDUIT SHALL BE HOT DIP GALVANIZED CONFORMING TO FS WWC 581, ANSI C80.1 AND UL 6.

5. FITTINGS SHALL BE THREADED TYPE OF GALVANIZED MALLEABLE IRON CONSTRUCTION.

6. HEAVY WALL PVC CONDUIT SHALL BE USED FOR ALL GROUNDING CONDUCTORS AND OTHER SPECIFIC USES AS INDICATED BY THE DRAWINGS. HEAVY WALL PVC CONDUIT SHALL BE SCHEDULE 40, 90 DEGREES C, UL RATED, CONSTRUCTED OF POLYVINYL CHLORIDE AND CONFORMING TO NEMA TC-2 FOR DIRECT BURIAL OR NORMAL ABOVE GROUND USE. FITTING SHALL BE OF THE SOLVENT WELD TYPE. CONDUITS SHALL BE SUPPORTED WITH NON-METALLIC DEVICES.

7. MINIMUM SIZE CONDUIT UNLESS OTHERWISE INDICATED SHALL BE 3/4-INCH TRADE SIZE. ALL CONDUITS WHICH ARE TO REMAIN EMPTY SHALL BE PROVIDED WITH A NYLON PULL LINE. CONDUITS SHALL BE INDEPENDENTLY SUPPORTED FROM THE BUILDING STRUCTURE AND SHALL NOT BE ATTACHED TO THE SUPPORT SYSTEMS PROVIDED BY OTHER TRADES UNLESS SPECIFICALLY INDICATED.

8. PROVIDE SLEEVES FOR ALL CONDUITS PASSING THROUGH FLOOR SLABS AND WALLS. THE ANNULAR SPACE BETWEEN THE WALL AND THE SLEEVE SHALL BE KEPT TO A MINIMUM AND FILLED WITH FIRE STOP MATERIALS. SLEEVES SHALL BE NOMINALLY 1-INCH TRADE SIZE LARGER AND CONSTRUCTED OF THE SAME MATERIAL AS THE CONDUIT BEING INSTALLED.

SECTION 16120 - WIRE AND CABLES (600 VOLT AND BELOW)

1. WIRE AND CABLES FOR FEEDER AND BRANCH CIRCUITS SHALL BE SINGLE ANNEALED STRANDED COPPER CONDUCTORS WITH CONDUCTIVITY OF NOT LESS THAN 98 PERCENT AT 20 DEGREES C. WIRE AND CABLE SHALL BEAR THE UL LABEL AND SHALL MEET OR EXCEED THE REQUIREMENTS OF IPCEA-NEMA STANDARDS S-19-81 AND ASTM D-1352.

2. WIRE SIZES SHALL GENERALLY BE AS FOLLOWS:

A. CONTROL AND INTERLOCK WIRING NO. 14 AWG.

B. BRANCH CIRCUIT AND FEEDER WIRING NO. 12 AWG AND LARGER.

3. WIRE AND CABLE INSULATION SHALL BE AS FOLLOWS:

A. CONDUCTORS SIZE NO. 14 AWG THROUGH NO. 4/0 AWG SHALL BE 600 VOLT TYPE THWN FOR DRY AND WET LOCATIONS WITH A MAXIMUM OPERATING TEMPERATURE OF 75 DEGREES C.

B. CONDUCTORS SIZE 250 KCMIL AND LARGER SHALL BE 600 VOLT TYPE THHN/THWN OR XHHW FOR DRY AND WET LOCATIONS WITH A MAXIMUM OPERATING TEMPERATURE OF 90 AND 75 DEGREES C., RESPECTIVELY.

4. FOR CONVENIENCE IN TESTING AND MAINTENANCE ALL SECONDARY CONDUCTORS SHALL BE COLOR-CODED IN ACCORDANCE WITH THE ESTABLISHED BUILDING STANDARD. CONTROL CIRCUIT WIRING SHALL HAVE SEPARATED IDENTIFYING COLORS OR NUMBERS.

5. PROVIDE UL LABELED CONNECTORS OF AMPACITY RATINGS AND TYPES FOR APPLICATIONS INDICATED.

A. CONNECTIONS FOR WIRE SIZES NO. 14 AWG THROUGH NO. 10 AWG SHALL BE MADE WITH 3-M "SCOTCHLOK" SPRING CONNECTORS.

B. CONDUCTORS NO. 8 AWG AND LARGER SHALL BE SPLICED AND TAPPED WITH COLOR-KEYED WROUGHT COPPER COMPRESSION CONNECTORS AS MANUFACTURED BY THOMAS & BETTS. THE MANUFACTURER'S RECOMMENDED TOOLING SHALL BE USED FOR INSTALLATION. LONG BARREL SLEEVES, TWO HOLE LUGS AND "C" TYPE CONNECTORS SHALL BE USED. SPLICE AND TAP CONNECTORS SHALL BE COMPATIBLE WITH CONDUCTOR MATERIAL.

8. UNLESS SPECIFICALLY INDICATED OTHERWISE, EACH SINGLE PHASE BRANCH CIRCUIT SHALL CONSIST OF RESPECTIVE PHASE CONDUCTOR AND A DEDICATED NEUTRAL CONDUCTOR.

9. PROVIDE A SEPARATE INSULATED GROUND WIRE IN EACH FEEDER, BRANCH CIRCUIT AND OTHER CONDUITS CONTAINING CURRENT CARRYING CONDUCTORS. EQUIPMENT GROUNDING CONDUCTORS SHALL BE GREEN-COLORED OR IDENTIFIED WITH GREEN TAPE AT ALL ACCESS POINTS.

SECTION 16135 - ELECTRICAL BOXES AND FITTINGS

1. OUTLET BOXES SHALL BE CONSTRUCTED OF GALVANIZED FLAT ROLLED SHEET-STEEL OF SHAPES AND SIZES SUITABLE FOR INSTALLATION OF WIRING DEVICES. PROVIDE BOXES WITH THREADED SCREW HOLES, WITH CORROSION-RESISTANT COVER AND GROUNDING SCREWS FOR FASTENING SURFACE AND DEVICE TYPE BOX COVERS AND FOR EQUIPMENT TYPE GROUNDING. OUTLET BOX ACCESSORIES SHALL BE PROVIDED AS REQUIRED FOR EACH INSTALLATION.

2. JUNCTION AND PULL BOXES SHALL BE CONSTRUCTED OF GALVANIZED CODE-GAUGE SHEET STEEL WITH SCREW-ON COVERS OF TYPES, SHAPES AND SIZES TO SUIT EACH RESPECTIVE LOCATION AND INSTALLATION. BOXES SHALL BE OF RIVETED OR WELDED CONSTRUCTION AND SHALL HAVE PLAIN MACHINE SCREW ATTACHED COVERS.

SECTION 16143 - WIRING DEVICES

1. GENERAL PURPOSE DUPLEX RECEPTACLES SHALL BE SPECIFICATION GRADE, 2-POLE, 3-WIRE, GROUNDING TYPE, RATED 20 AMPERES, 125-VOLTS, NEMA CONFIGURATION 5-20R, HUBBELL 5362, OR APPROVED EQUAL.

2. GROUND FAULT DUPLEX RECEPTACLES SHALL BE SPECIFICATION GRADE,2-POLE, 3-WIRE GROUNDING TYPE, RATED 20 AMPERES, 125 VOLTS, NEMA CONFIGURATION 5-20R, HUBBELL GF-5362, OR APPROVED EQUAL.

3. SINGLE-POLE TOGGLE SWITCHES SHALL BE SPECIFICATION GRADE, QUIET TYPE RATED 20 AMPERES, 120-277 VOLTS, 60 HERTZ, HUBBELL 1221, OR APPROVED EQUAL.

4. THREE-WAY TOGGLE SWITCHES SHALL BE SPECIFICATION GRADE, QUIET TYPE RATED 20 AMPERES, 120-277 VOLTS, 60 HERTZ, HUBBELL 1223, OR APPROVED EQUAL.

5. WALLPLATES SHALL BE FOR SINGLE WIRING DEVICES OF TYPES, SIZES AND WITH GANGING AND CUTOUTS AS REQUIRED. WALLPLATES SHALL BE 0.035 " THICK, TYPE 302 SATIN FINISHED STAINLESS STEEL.

6. PROVIDE AN INSULATED EQUIPMENT GROUNDING CONDUCTOR CONNECTION FOR ALL WIRING DEVICES, UNLESS OTHERWISE INDICATED.

7. PRIOR TO ENERGIZING CIRCUITRY, TEST WIRING FOR ELECTRICAL CONTINUITY AND FOR SHORT-CIRCUITS. ENSURE PROPER POLARITY OF CONNECTIONS IS MAINTAINED.

SECTION 16145 - LIGHTING CONTROL DEVICES

1. MULTI-POLE CONTACTORS SHALL BE ELECTRICALLY OPERATED AND ELECTRICALLY HELD, COMPLYING WITH NEMA ICS 2 AND UL 508.

A. CURRENT RATING FOR SWITCHING: LISTING OR RATING CONSISTENT WITH TYPE OF LOAD SERVED, INCLUDING TUNGSTEN FILAMENT, INDUCTIVE, AND HIGH-INRUSH BALLAST (BALLAST WITH 15 PERCENT OR LESS TOTAL HARMONIC DISTORTION OF NORMAL LOAD CURRENT).

B. CONTROL-COIL VOLTAGE: MATCH CONTROL POWER SOURCE.

2. CONDUCTORS AND CABLES FOR LIGHTING CONTROL SYSTEM SHALL BE:

A. POWER WIRING TO SUPPLY SIDE OF REMOTE-CONTROL POWER SOURCES: NOT SMALLER THAN NO. 12 AWG, COMPLYING WITH DIVISION 16 SECTION 16120.

B. CLASSES 2 AND 3 CONTROL CABLE: MULTICONDUCTOR CABLE WITH STRANDED COPPER CONDUCTORS NOT SMALLER THAN NO. 24 AWG.

C. CLASS 1 CONTROL CABLE: MULTICONDUCTOR CABLE WITH STRANDED COPPER CONDUCTORS NOT SMALLER THAN NO. 18 AWG.

3. OUTDOOR PHOTOELECTRIC SWITCHES SHALL BE SOLID STATE, WITH SPST DRY CONTACTS RATED FOR 1800-VA TUNGSTEN OR 1000-VA INDUCTIVE, TO OPERATE CONNECTED RELAY, CONTACTOR COILS, MICROPROCESSOR INPUT, AND COMPLYING WITH UL 773A.

A. LIGHT-LEVEL MONITORING RANGE: 1.5 TO 10 FC, WITH AN ADJUSTMENT FOR TURN-ON AND TURN-OFF LEVELS WITHIN THAT RANGE , AND A DIRECTIONAL LENS IN FRONT OF PHOTOCELL TO PREVENT FIXED LIGHT SOURCES FROM CAUSING TURN-OFF.

B. TIME DELAY: 15-SECOND MINIMUM, TO PREVENT FALSE OPERATION.

C. SURGE PROTECTION: METAL-OXIDE VARISTOR TYPE, COMPLYING WITH IEEE C62.41 FOR CATEGORY A1 LOCATIONS.

D. MOUNTING: TWIST LOCK COMPLYING WITH IEEE C136.10, WITH BASE-AND-STEM MOUNTING OR STEM-AND-SWIVEL MOUNTING ACCESSORIES AS REQUIRED TO DIRECT SENSOR TO THE NORTH SKY EXPOSURE.

4. DIGITAL TIME SWITCHES SHALL BE ELECTRONIC, SOLID-STATE PROGRAMMABLE UNITS WITH ALPHANUMERIC DISPLAY COMPLYING WITH UL 917.

A. CONTACT CONFIGURATION: DPST.

B. CONTACT RATING: 30-A INDUCTIVE OR RESISTIVE, 240-V AC

C. PROGRAMS: 2 CHANNELS.

a) FOR EACH CHANNEL, 2 ON-OFF SET POINTS ON A 24-HOUR SCHEDULE WITH SKIP-A-DAY WEEKLY SCHEDULE.

b) CIRCUITRY: ALLOW CONNECTION OF A PHOTOELECTRIC RELAY AS SUBSTITUTE FOR ON AND OFF FUNCTION OF A PROGRAM.

D. ASTRONOMICAL TIME: ALL CHANNELS.

E. BATTERY BACKUP: FOR SCHEDULES AND TIME CLOCK.

F. REMOTE OVERRIDE: OVERRIDE SHUTOFF FUNCTION FOR ADJUSTABLE DURATION FOR EACH CHANNEL UP TO FOUR HOURS VIA LOW VOLTAGE WIRING.

SECTION 16170 - DISCONNECT SWITCHES

1. PROVIDE SURFACE-MOUNTED, HEAVY-DUTY TYPE, SHEET-STEEL ENCLOSED SAFETY SWITCHES, OF TYPES, SIZES AND ELECTRICAL CHARACTERISTICS INDICATED. SWITCHES SHALL BE QUICK-MAKE, QUICK-BREAK TYPE CONSTRUCTED SO THAT SWITCH BLADES ARE VISIBLE IN OFF POSITION WITH DOOR OPEN. EQUIP WITH OPERATING HANDLE WHICH IS INTEGRAL PART OF ENCLOSURE BASE AND WHOSE OPERATING POSITION IS EASILY RECOGNIZABLE, AND IS PADLOCKABLE IN THE ON OR OFF POSITION. CONSTRUCT CURRENT CARRYING PARTS OF HIGH-CONDUCTIVITY COPPER, WITH SILVER-TUNGSTEN TYPE SWITCH CONTACTS AND POSITIVE PRESSURE TYPE REINFORCED FUSE CLIPS. SWITCH ENCLOSURES GENERALLY SHALL BE NEMA TYPE 1 AND 3R FOR RAIN-TIGHT CONSTRUCTION.

2. PROVIDE FUSES FOR SAFETY SWITCHES, AS RECOMMENDED BY SWITCH MANUFACTURER, OF CLASSES, TYPES AND RATINGS NEEDED TO FULFILL ELECTRICAL REQUIREMENTS FOR SERVICE INDICATED.

3. FOR EACH SAFETY SWITCH ON THE LOAD SIDE OF A VARIABLE FREQUENCY DRIVE, PROVIDE A SINGLE POLE, DOUBLE THROW AUXILIARY CONTACT TO STOP THE VARIABLE FREQUENCY DRIVE WHEN THE SAFETY SWITCH IS IN THE OFF POSITION. INTERLOCK WIRING BETWEEN DISCONNECT SWITCH AND VARIABLE FREQUENCY DRIVE SHALL BE IN SEPARATE RACEWAY FROM THE MOTOR FEEDER WIRING FROM THE DRIVE.

4. PROVIDE A 30A, 1 POLE DISCONNECT SWITCH AT EACH FIRE ALARM AND NAC BOOSTER PANEL. SWITCH SHALL BE PAINTED RED AND LABELED "FIRE ALARM CIRCUIT"

SECTION 16190 - SUPPORTING DEVICES

1. PROVIDE SUPPORTING DEVICES OF TYPES, SIZES AND MATERIALS INDICATED, HAVING THE FOLLOWING CONSTRUCTION FEATURES:

A. CLEVIS HANGERS SHALL BE USED FOR SUPPORTING 2" AND LARGER CONDUIT AND SHALL BE CONSTRUCTED OF GALVANIZED STEEL WITH ½" DIAMETER HOLE FOR ROUND STEEL ROD.

B. ONE-HOLE CONDUIT STRAPS SHALL BE USED FOR SUPPORTING 3/4" TO 1-1/2" CONDUIT AND SHALL BE CONSTRUCTED OF GALVANIZED STEEL.

C. TWO-HOLE CONDUIT STRAPS SHALL BE USED FOR SUPPORTING CONDUIT ON STEEL RACKS.

2. PROVIDE STEEL ANCHORS OF TYPES, SIZES AND MATERIALS REQUIRED FOR THE EQUIPMENT BEING SUPPORTED.

3. PROVIDE CABLE SUPPORTS WITH INSULATING WEDGING PLUG FOR NON-ARMORED TYPE ELECTRICAL CABLES IN RISERS.

4. PROVIDE U-CHANNEL STRUT SYSTEM FOR SUPPORTING ELECTRICAL EQUIPMENT, 12-GAUGE HOT-DIP GALVANIZED STEEL, OF TYPES AND SIZES INDICATED AND WITH THE CONDUIT CLAMPS, CONDUIT HANGERS AND OTHER FITTINGS WHICH MATE AND MATCH WITH U-CHANNEL.

5. INSTALL HANGERS, SUPPORTS, CLAMPS AND ATTACHMENTS TO SUPPORT PIPING PROPERLY FROM BUILDING STRUCTURE. ARRANGE FOR GROUPING OF PARALLEL RUNS OF HORIZONTAL CONDUITS TO BE SUPPORTED TOGETHER ON TRAPEZE TYPE HANGERS WHERE POSSIBLE. INSTALL SUPPORTS WITH SPACINGS INDICATED AND IN COMPLIANCE WITH NEC REQUIREMENTS.

6. NO MINERALLAC "JIFFY" TYPE CONDUIT SUPPORTS SHALL BE INSTALLED EXPOSED BELOW 8'-0" A.F.F. USE ONE-HOLE STRAPS INSTEAD.

SECTION 16195 - ELECTRICAL IDENTIFICATION

1. PANELBOARDS MOTOR STARTERS AND SIMILAR ELECTRICAL ENCLOSURES SHALL BE IDENTIFIED BY NAMEPLATES SHOWING THE EQUIPMENT IDENTIFICATION NUMBER, VOLTAGE AND FEEDER OR BRANCH CIRCUIT NUMBERS (E.G. PANEL LP-1 - 208/120 VOLTS - FDR 1-5). NAMEPLATES GENERALLY SHALL BE CUSTOM TWO-TONE LAMINATED PLASTIC WITH BEVELED EDGES. NAMEPLATES, UNLESS OTHERWISE INDICATED, SHALL BE WHITE LETTERS ON BLACK BACKGROUND.

2. CONDUITS SHALL BE IDENTIFIED IN EACH ROOM AND 50 FOOT ON CENTERS IN OPEN AREAS BY VOLTAGE AND FEEDER NUMBER (E.G. FDR 1-5 - 208/120 VOLTS). CONDUIT MARKERS SHALL BE STANDARD PRE-PRINTED FLEXIBLE PLASTIC SHEET MATERIAL OR SELF-ADHERING VINYL LABELS.

3. FEEDER CONDUCTORS IN EACH PULL BOX AND IDENTIFIED WITH A PAPER TAG AS TO NUMBER, VOLTAGE AND CABLE SIZE (E.G. FDR 1-5 - 208/120 VOLTS - 4 NO. 250 MCM). BRANCH CIRCUITS SHALL BE IDENTIFIED WITH A PAPER TAG IN EACH JUNCTION AND OUTLET BOX BY PANEL AND CIRCUIT NUMBER (E.G. PNL. LP-5 - CIRC. 3).

SECTION 16460 - DRY TYPE TRANSFORMERS (600 VOLT AND BELOW)

1. THREE PHASE TRANSFORMERS SHALL BE 480 VOLT (DELTA) PRIMARY AND 208/120 VOLT (WYE) CONNECTED SECONDARY. TRANSFORMERS SHALL BE PROVIDED WITH 6 - 2-1/2 PERCENT FULL CAPACITY TAPS, 2 ABOVE AND 4 BELOW THE PRIMARY RATING.

2. TRANSFORMERS SHALL BE DESIGNED FOR 150 DEGREE C. TEMPERATURE RISE ABOVE AN AMBIENT TEMPERATURE OF 40 DEGREES C. ALL INSULATING MATERIALS SHALL BE IN ACCORDANCE WITH NEMA ST20 STANDARD FOR 220 DEGREES C. UL COMPONENT RECOGNIZED INSULATION SYSTEM. TRANSFORMER COILS SHALL BE OF THE CONTINUOUS WOUND ALUMINUM CONSTRUCTION AND SHALL BE IMPREGNATED WITH NON-HYDROSCOPIC, THERMOSETTING VARNISH. TRANSFORMERS SHALL BE MOUNTED IN A HEAVY GAUGE, SHEET METAL, VENTILATED ENCLOSURE. THE VENTILATING OPENINGS SHALL BE DESIGNED TO PREVENT ACCIDENTAL ACCESS TO LIVE PARTS IN ACCORDANCE WITH UL, NEMA AND NEC STANDARDS FOR VENTILATED ENCLOSURES. THE MAXIMUM TEMPERATURE OF THE TOP OF THE ENCLOSURE SHALL NOT EXCEED 50 DEGREES C. RISE ABOVE A 40 DEGREE C. AMBIENT. ENCLOSURE SHALL BE CLEANED, PRIMED AND FINISHED IN THE MANUFACTURER'S STANDARD COLOR BAKED ENAMEL.

3. TRANSFORMER SHALL BE CONNECTED BY NOMINALLY 18-INCHES OF FLEXIBLE CONDUIT. TRANSFORMER SHALL BE LOCATED TO PROVIDE ADEQUATE VENTILATION ON ALL SIDES AND CODE REQUIRED CLEARANCE FOR ACCESS TO CONNECTIONS AND TAPS.

SECTION 16470 - PANELBOARDS

1. PANELBOARDS SHALL BE NEMA 1 FOR SURFACE OR RECESSED MOUNTING, CIRCUIT BREAKER TYPE, IN A SINGLE WIDTH FACTORY ASSEMBLED ENCLOSURE INCLUDING BOX, INTERIOR, TRIM AND FRONT. PANELBOARDS AND ENCLOSING CABINETS SHALL CONFORM TO STANDARDS ESTABLISHED BY UNDERWRITERS' LABORATORIES, INC., AND REQUIREMENTS OF NEC AND SHALL BEAR THE UL LABEL. UNLESS OTHERWISE INDICATED, PANELBOARDS SHALL BE MOUNTED 6 FEET TO THE TOP OF THE CABINET.

2. EACH PANELBOARD SHALL BE PROVIDED WITH AN INSULATED NEUTRAL BUS AND A GROUND BUS BONDED TO THE PANEL BACKBOX. NEUTRAL AND GROUND BUS SHALL BE READILY IDENTIFIED AND SHALL BE PROVIDED WITH SCREW TYPE TERMINALS. ALL BUS BARS SHALL BE ELECTRICAL GRADE COPPER. THE MAIN BUS BRACING SHALL BE EQUAL OR GREATER THAN THE INTERRUPTING CURRENT RATING CALLED FOR BY THE DRAWINGS.

3. EACH PANEL SHALL BE EQUIPPED WITH A TYPEWRITTEN DIRECTORY, INDICATING PLAINLY WHAT EACH BRANCH CIRCUIT OF THE PANEL CONTROLS. THE DIRECTORY SHALL BE PLACED IN A CLEAR PLASTIC PROTECTIVE ENVELOPE AND FASTENED TO THE INSIDE OF THE DOOR.

4. BRANCH CIRCUIT PROTECTION DEVICES SHALL BE MOLDED CASE CIRCUIT BREAKERS WITH QUICK-MADE, QUICK-BREAK TOGGLE MECHANISM, INVERSE TIME DELAY OVERLOAD AND INSTANTANEOUS SHORT CIRCUIT PROTECTION BY MEANS OF THERMAL MAGNETIC ELEMENT. AUTOMATIC TRIPPING SHALL BE INDICATED BY A HANDLE POSITION BETWEEN THE MANUAL "OFF" AND "ON" POSITION. BREAKERS SHALL BE "BOLT-ON" INTERCHANGEABLE TYPE AND CAPABLE OF BEING OPERATED IN ANY POSITION. CIRCUIT BREAKERS SHALL BE DESIGNED TO CARRY THEIR FULL RATING CONTINUOUSLY IN AMBIENT TEMPERATURE OF 40 DEGREES C. TWO AND THREE POLE BREAKERS SHALL HAVE COMMON TRIP HANDLE. ALL LIGHTING BRANCH CIRCUIT BREAKERS SHALL BE SWITCH RATED. PANELBOARDS SHALL HAVE MAIN AND BRANCH CIRCUIT BREAKERS AS INDICATED ON THE DRAWINGS. WHERE PANELS HAVE SPACES FOR FUTURE BREAKERS, THE SPACE SHALL INCLUDE COMPLETE BUSWORK, HARDWARE, APPURTENANCES, ETC., TO ACCOMMODATE FUTURE BREAKERS.

5. PROVIDE LOCKING DEVICES FOR CIRCUIT BREAKERS WHICH ARE TO BE KEPT IN LOCKED POSITION. FOR ALL CIRCUIT BREAKERS SERVING RANGES (WHETHER CORD-AND-PLUG CONNECTED OR HARD WIRED) OR OTHER HARD WIRED APPLIANCES, PROVIDE PADLOCKING OR OTHER PROVISIONS TO LOCK THE CIRCUIT BREAKER IN THE "OFF" POSITION.

6. [PANEL FRONTS SHALL BE PROVIDED WITH A CONTINUOUS HINGE ALONG THE LEFT SIDE FOR EASY ACCESS TO THE WIRE COMPARTMENT (DOOR WITHIN DOOR CONSTRUCTION).]

SECTION 16473 - TRANSIENT VOLTAGE SURGE SUPPRESSION

1. TRANSIENT VOLTAGE SURGE SUPPRESSOR (TVSS) SHALL BE LISTED IN ACCORDANCE WITH UL 1449, STANDARD FOR SAFETY, THIRD EDITION, TRANSIENT VOLTAGE SURGE SUPPRESSORS, AND UL 1283, ELECTROMAGNETIC INTERFERENCE FILTERS. TVSS SHALL BE TESTED WITH THE CATEGORY C3 HIGH EXPOSURE WAVEFORM (20KV-1.2/50 MS, 10KA-8/20MS) PER ANSI/IEEE C62.41 - 1991.

2. TVSS SHALL BE MODULAR IN DESIGN. EACH SUPPRESSION ELEMENT SHALL BE A USER REPLACEABLE SURGE CURRENT DIVERSION MODULE. (MOV BASED) EACH SURGE CURRENT DIVERSION MODULE SHALL BE FUSED WITH USER REPLACEABLE 200 KAIC RATED FUSES. EACH SURGE CURRENT DIVERSION MODULE SHALL INCLUDE SOLID STATE STATUS INDICATOR LIGHTS AND THERMAL CUTOUTS.

3. TVSS SHALL PROVIDE REDUNDANT SURGE CURRENT DIVERSION MODULES BETWEEN EACH PHASE CONDUCTOR AND THE NEUTRAL CONDUCTOR AND BETWEEN THE NEUTRAL CONDUCTOR AND GROUND. FOR DELTA CONFIGURED SYSTEMS, THE TVSS SHALL HAVE COMPONENTS DIRECTLY CONNECTED BETWEEN EACH PHASE CONDUCTOR AND BETWEEN EACH PHASE CONDUCTOR AND GROUND. EACH MODE OF PROTECTION SHALL UTILIZE TWO CURRENT SHARING SURGE CURRENT DIVERSION MODULES IN PARALLEL FOR EITHER A WYE OR DELTA CONFIGURATION.

4. TVSS SHALL INCORPORATE COPPER BUS BARS FOR THE SURGE CURRENT PATH. SURGE CURRENT DIVERSION MODULES SHALL USE BOLTED CONNECTIONS TO THE BUS BARS FOR RELIABLE LOW IMPEDANCE CONNECTIONS.

5. TVSS SHALL MEET OR EXCEED THE FOLLOWING CRITERIA:

A. MAXIMUM SINGLE IMPULSE CURRENT RATING SHALL BE 240KA, PER PHASE FOR SERVICE ENTRANCE EQUIPMENT AND 160KA PER PHASE FOR DISTRIBUTION PANELBOARD PROTECTION.

B. PULSE LIFE TEST: CAPABLE OF PROTECTING AGAINST AND SURVIVING 5000 ANSI/IEEE C62.41 CATEGORY C3 TRANSIENTS WITHOUT FAILURE OR DEGRADATION OF UL 1449 VOLTAGE PROTECTION RATING BY MORE THAN 10%.

C. UL 1449 SUPPRESSION VOLTAGE RATINGS SHALL NOT EXCEED THE FOLLOWING:

VOLTAGE	L-N	N-G	MCOV
208Y/120	330V	330V	150V
480Y/277	700V	700V	320V

D. THE ANSI/IEEE C62.41-1991 CATEGORY C3 LET THROUGH VOLTAGES SHALL NOT EXCEED THE FOLLOWING:

VOLTAGE	L-N	N-G	MCOV
208Y/120	470V	470V	150V
480Y/277	920V	920V	320V

6. TVSS SHALL BE DESIGNED TO WITHSTAND A MAXIMUM CONTINUOUS OPERATING VOLTAGE (MCOV) OF NOT LESS THAN 115% OF NOMINAL RMS VOLTAGE.

7. TVSS SHALL HAVE A MINIMUM EMI/RFI FILTERING OF -50DB AT 100KHZ WITH AN INSERTION RATIO OF 50:1 USING MIL STD. 220A METHODOLOGY.

8. TVSS SHALL BE EQUIPPED WITH ONBOARD VISUAL AND AUDIBLE DIAGNOSTIC MONITORING. RED AND GREEN INDICATOR LIGHTS SHALL PROVIDE FULL TIME VISUAL DIAGNOSTIC MONITORING OF THE OPERATIONAL STATUS OF EACH PHASE, AS WELL AS EACH SURGE CURRENT DIVERSION MODULE. AUDIBLE DIAGNOSTIC MONITORING SHALL BE BY WAY OF AUDIBLE ALARM. THIS ALARM SHALL ACTIVATE UPON A FAULT CONDITION. AN ALARM ON/OFF SWITCH SHALL BE PROVIDED TO SILENCE THE ALARM. AN ALARM PUSH TO TEST SWITCH SHALL BE PROVIDED. THE TVSS DIAGNOSTIC MONITORING DEVICES SHALL BE MOUNTED ON THE FRONT OF THE ENCLOSURE. THE DIAGNOSTIC MONITORING CIRCUITS SHALL CONTINUALLY MONITOR THE OPERATIONAL STATUS OF THE SURGE CURRENT DIVERSION MODULES. NO OTHER TEST EQUIPMENT SHALL BE REQUIRED FOR TVSS MONITORING OR TESTING BEFORE OR AFTER INSTALLATION.

9. TVSS SHALL HAVE A RESPONSE TIME NO GREATER THAN 1 NANOSECOND FOR ANY OF THE INDIVIDUAL PROTECTION MODES.

10. TVSS WILL HAVE A WARRANTY FOR A PERIOD OF FIVE YEARS, INCORPORATING UNLIMITED REPLACEMENTS OF SUPPRESSOR PARTS DURING THE WARRANTY PERIOD.

11. TVSS SHALL BE INSTALLED IN ACCORDANCE WITH MANUFACTURER'S RECOMMENDATION. MINIMIZE LENGTH AND BENDS IN CABLE CONNECTION.

SECTION 16515 - INTERIOR LIGHTING FIXTURES

1. LIGHTING FIXTURES SHALL BE UL LISTED AND LABELED WITH UL LISTED WIRING. WIRING SHALL BE SUITABLE FOR THE LIGHTING FIXTURE TEMPERATURE LISTING.

2. ALL FLUORESCENT LIGHTING FIXTURES SHALL HAVE HIGH POWER FACTOR, ENERGY CONSERVING SOLID STATE BALLASTS. EACH BALLAST SHALL BE PROVIDED WITH INTEGRAL THERMAL PROTECTION. ALL BALLASTS SHALL HAVE AN "A" SOUND RATING, AND UL, CBM AND ELECTRICAL TESTING LABORATORIES CERTIFICATION. BALLASTS SHALL HAVE LESS THAN 20% TOTAL HARMONIC DISTORTION. BALLASTS SHALL BE PROGRAMMED RAPID START, EXCEPT WHERE OTHERWISE INDICATED. ALL BALLASTS SHALL BE RATED FOR USE AT 120 OR 277 VOLTS, 60 HERTZ AS SCHEDULED. BALLASTS SHALL BE MADE BY ADVANCE, UNIVERSAL OR APPROVED EQUAL. ALL BALLASTS FOR OUTDOOR USE SHALL BE LOW TEMPERATURE TYPE (-20 DEGREES F).

FLUORESCENT LAMPS SHALL BE NOMINALLY 32 WATT T8, 4100°K, MINIMUM CRI-80, UNLESS OTHERWISE NOTED IN LIGHTING FIXTURE SCHEDULE. INCANDESCENT LAMPS SHALL BE INSIDE FROSTED, REFLECTOR TYPE, OR AS OTHERWISE NOTED. LL LAMPS SHALL BE MANUFACTURED BY GENERAL ELECTRIC, OSRAM-SYLVANIA, NORTH AMERICAN PHILLIPS, OR APPROVED EQUAL.

3. INDUSTRIAL OR STRIP FLUORESCENT LIGHTING FIXTURES, UNLESS INDICATED OTHERWISE, SHALL BE CHAIN SUSPENDED AND EQUIPPED WITH A PREWIRED "SJ" CORD AND 120-VOLT GROUNDED TYPE PLUG. FIXTURES SHALL BE SUPPORTED FROM A DAY-BRITE 5900 SERIES OR IDEAL 360-7300 SERIES HYDEE FIXTURE HANGER, COMPLETE WITH 120-VOLT GROUNDED RECEPTACLE, "S" HOOKS AND CORD GRIPS. HANGERS SHALL BE MOUNTED TO A 4" ROUND OUTLET BOX AND BE THE TYPE THAT PERMITS 360 DEGREE ADJUSTMENT OF THE FIXTURES.

4. ALL LIGHTING FIXTURES SHALL BE THOROUGHLY CLEANED TO REMOVE ALL CONSTRUCTION DUST, PAINT, CEMENT, ETC. THIS SHALL INCLUDE ALL LIGHT REFLECTING SURFACES, FRAMES AND LENSES. ANY LIGHTING FIXTURES OR PARTS OF LIGHTING FIXTURES DAMAGED BY THE CONSTRUCTION WORK SHALL BE REPLACED. ALL LAMPS SHALL BE NEW AND ANY LAMPS INSTALLED IN LIGHTING FIXTURES FOR USE DURING CONSTRUCTION SHALL BE REPLACED.

SUSTAINABLE
PLANNING
ARCHITECTURE
INTERIOR DESIGN
OLSEN**DESIGN**GROUP
ARCHITECTS
2345 Bernville Road
Reading, PA 19605
610.371.9606
Fax 610.371.9607
www.odgarchitects.com

COPYRIGHT © 2014
ALL RIGHTS RESERVED, NEITHER ALL NOR ANY PART OF THIS DOCUMENT MAY BE AMENDED, REPRODUCED, COPIED OR USED IN ANY FORM OR MANNER EXCEPT PURSUANT TO CONTRACT WITH OR WITH THE SPECIFIC WRITTEN PERMISSION OF Olsen Design Group Architects, Inc.
PROPERTY RIGHTS ARE EXPRESSLY RESERVED BY Olsen Design Group Architects, Inc.

Multani Associates, Inc.
955 Penn Avenue
Wyomissing, PA 19610
610-374-0821 (FAX) 610-374-7071

Wanko + Mitten Energy Systems
508 Chestnut Streer
Hamburg, PA 19526
610-914-1980 (FAX)

Renovations to
Recycling Center Baler Facility for
The City of Reading
Hill Road
Reading, Berks County, PA

	Date	Activities	Dwg By	Chk By
	7/8/14	ISSUE FOR BIDDING	BRM	BRM

Revisions:

Drawing Title:
ELECTRICAL SPECIFICATIONS

Project No: WMES14011
Scale: AS NOTED
Drawn By: BRM
Contract Date:
Checked By: BRM
Last Update: 07/08/14
Seal:
Drawing No: E-9.01