READING FIRE DEPARTMENT
ENGINE 3
READING PENNSYLVANIA

GENERATOR / BOILER REPLACEMENT

PROJECT NO. 81083-01
JUNE 2020

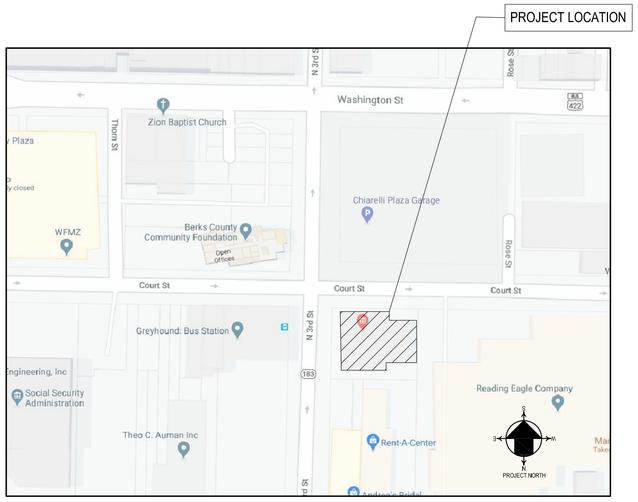

DRAWING INDEX

SHEET NO.	SHEET TITLE
GENERAL	
G-1	COVER SHEET
MECHANICAL	
M-101	BOILER ROOM FLOOR PLAN
M-102	CONTROL DIAGRAMS
M-103	SPECIFICATIONS
ELECTRICAL	
E-001	ELECTRICAL SYMBOLS LEGEND
E-002	ELECTRICAL ABBREVIATIONS AND GENERAL INFORMATION
E-003	ELECTRICAL SITE PLAN
E-011	FLOOR PLANS - ELECTRICAL DEMOLITION
E-101	FLOOR PLANS - POWER
E-501	ELECTRICAL DETAILS
E-601	ONE LINE DIAGRAM
E-602	PANEL SCHEDULES
E-603	PANEL SCHEDULES

PRELIMINARY - NOT FOR CONSTRUCTION

BUCHART HORN
ENGINEERS • ARCHITECTS • PLANNERS

MEP/F
Buchart Horn Architects
44 North Philadelphia Street
York, PA 17401
717.852.1400

READING FIRE DEPARTMENT ENGINE 3, 3 rd & COURT
GENERATOR / BOILER REPLACEMENT
15 N 3 rd STREET
READING, PA
DEPARTMENT OF PUBLIC WORKS, CITY OF READING, PENNSYLVANIA
815 WASHINGTON ST.
READING, PA

REVISIONS

MARK	ISSUED DATE	DESCRIPTION

PROJECT NO:	81083-01
ISSUED DATE:	06/12/20
DRAWN BY:	WCA
CHECKED BY:	JJG

© BUCHART HORN, INC.

SHEET TITLE:
COVER SHEET

SHEET NO:
G-1

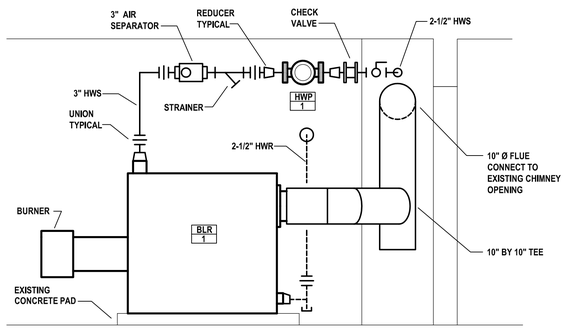

SECTION "A" BOILER ELEVATION

SCALE : 1/2" = 1' - 0"

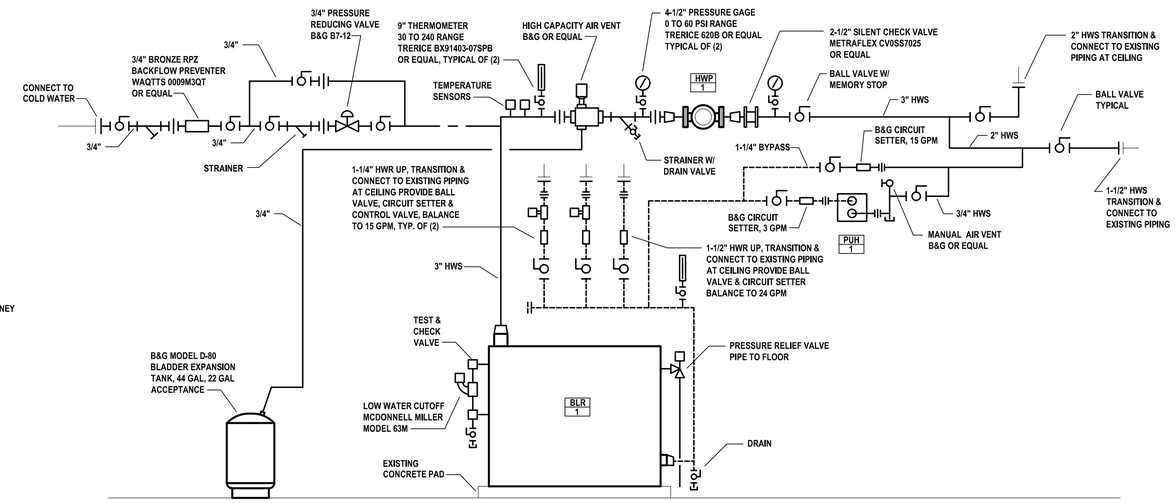

SCHEMATIC HOT WATER PIPING DIAGRAMS

NO SCALE

SYMBOLS LIST

HWS	HOT WATER SUPPLY PIPING
HWR	HOT WATER RETURN PIPING
CW	DOMESTIC COLD WATER PIPING
G	GAS PIPING
V	VENT PIPING
	BALL VALVE
	STRAINER
	UNION
	PIPE TURNED UP
	PIPE TURNED DOWN
H.C.	HEATING CONTRACTOR
E.C.	ELECTRICAL CONTRACTOR

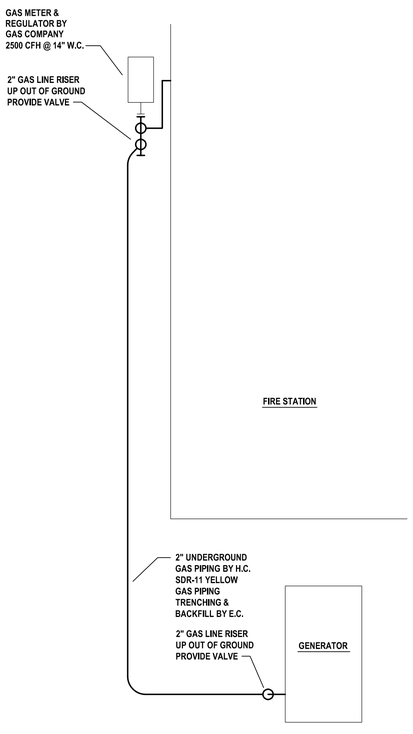

PARTIAL SITE PLAN

SCALE : 1/4" = 1' - 0"

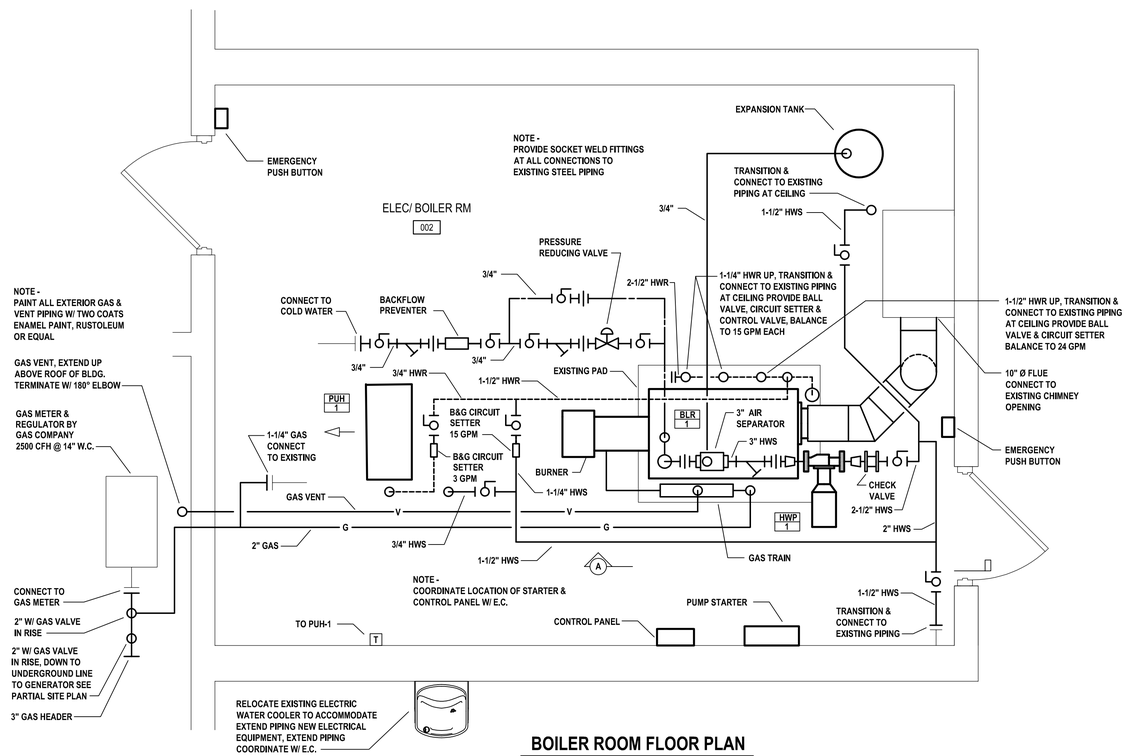

BOILER ROOM FLOOR PLAN

SCALE : 1/2" = 1' - 0"

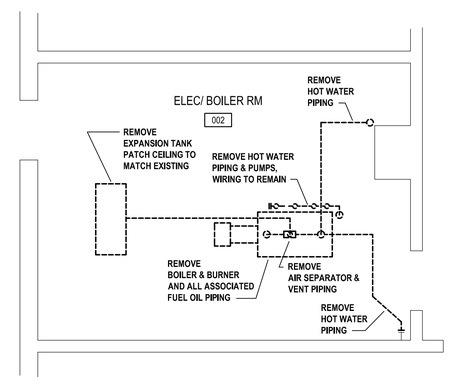

BOILER ROOM DEMOLITION PLAN

SCALE : 1/4" = 1' - 0"

KEY PLAN

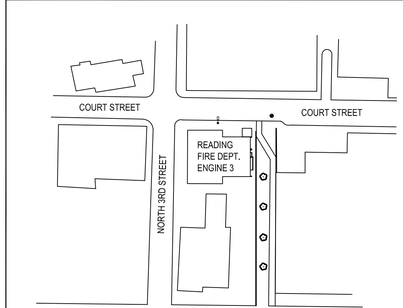

PRELIMINARY - NOT FOR CONSTRUCTION

BUCHART HORN
ENGINEERS • ARCHITECTS • PLANNERS

M E P E
Buchart Horn Architects
445 West Philadelphia Street
York, PA 17401
717.852.1400

READING FIRE DEPARTMENT ENGINE 3, 3 rd & COURT GENERATOR / BOILER REPLACEMENT

15 N 3 rd STREET
READING, PA

DEPARTMENT OF PUBLIC WORKS, CITY OF READING, PENNSYLVANIA

815 WASHINGTON ST.
READING, PA

REVISIONS			
MARK	ISSUED DATE	DESCRIPTION	

PROJECT NO:	81083-01
ISSUED DATE:	06/05/20
DRAWN BY:	RCM
CHECKED BY:	RCM

© BUCHART HORN, INC.

SHEET TITLE:

BOILER ROOM FLOOR PLAN

SHEET NO:

M-101

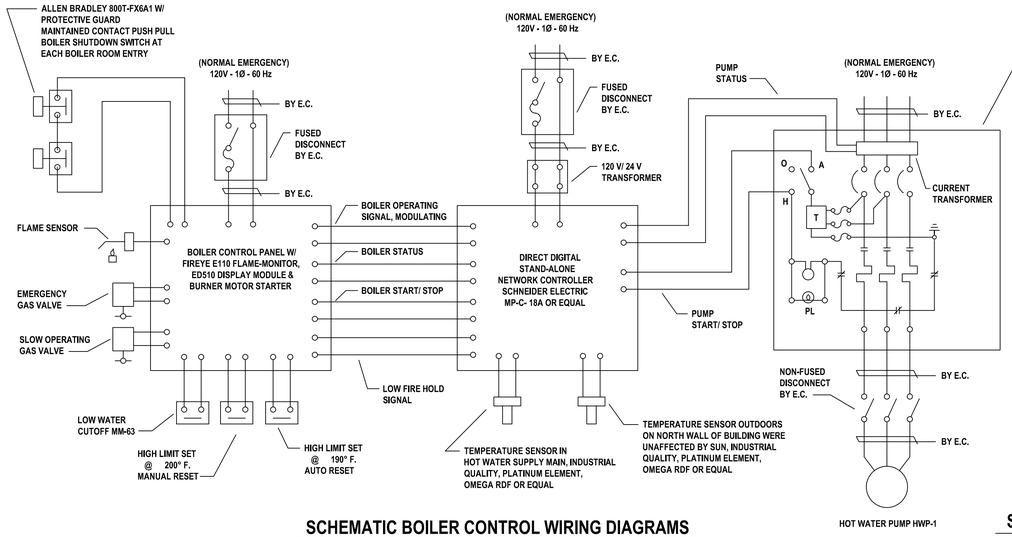

SCHEMATIC BOILER CONTROL WIRING DIAGRAMS

NO SCALE

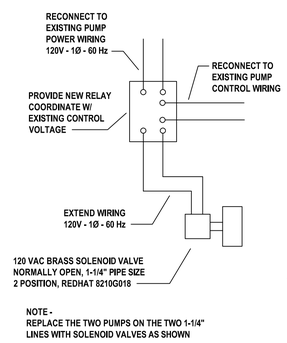

SCHEMATIC ZONE VALVE CONTROL WIRING DIAGRAMS

NO SCALE

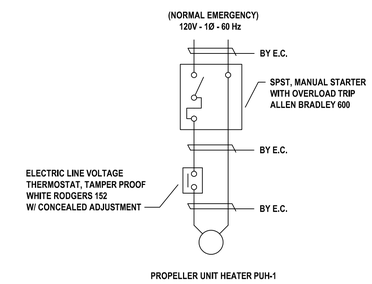

SCHEMATIC UNIT HEATER CONTROL WIRING DIAGRAMS

NO SCALE

BOILER SCHEDULE

MARK	MBH INPUT	MBH OUTPUT	GAS PRESSURE	BURNER HP	POWER	BASIS OF DESIGN	MODEL
BLR-1	935	753	10" W.C. TO 14"W.C.	1/2	120 V - 1 Ø - 60 Hz	WEIL MCLAIN	780

HOT WATER PUMP SCHEDULE

MARK	GPM	OPERATING HEAD (FT.)	SHUTOFF HEAD (FT.)	MOTOR HP	POWER	BASIS OF DESIGN	MODEL
HWP-1	72	44	46	2	208 V - 3 Ø - 60 Hz	BELL & GOSSETT	60 - 2 x 2 x 7
HWP-2	72	44	46	2	208 V - 3 Ø - 60 Hz	BELL & GOSSETT	60 - 2 x 2 x 7
PROVIDE HWP-2 LOOSE IN A BOX TO OWNER FOR A SPARE							

PROPELLER UNIT HEATER SCHEDULE

MARK	MBH CAPACITY	CFM	GPM	MOTOR HP	MOTOR RPM	POWER	HEIGHT	BASIS OF DESIGN	MODEL
PUH-1	34	400	3	1/20	1050	120 V - 1 Ø - 60 Hz	11-1/2"	MODINE	HHD30

HOT WATER RESET SCHEDULE

OUTDOOR AIR TEMPERATURE	HOT WATER SUPPLY TEMPERATURE
5	180
30	160
55	140

SEQUENCE OF CONTROL

UPON ANY BOILER EMERGENCY PUSHBUTTON SWITCH BEING ACTIVATED BOILER SHALL SHUT DOWN. BOILERS SHALL NOT RESTART UNTIL SWITCH IS MANUALLY RESET.

CONTROL PANEL SHALL MONITOR OUTDOOR AIR TEMPERATURE. UPON A DROP IN OUTDOOR AIR TEMPERATURE TO 55 DEGREES BOILER SYSTEM SHALL INITIATE. HOT WATER PUMP SHALL BE INDEXED TO START. CONTROL PANEL SHALL MONITOR STATUS OF PUMP. BOILER OPERATION SHALL NOT BE INITIATED UNTIL PUMP OPERATION IS CONFIRMED.

ONCE PUMP OPERATION IS CONFIRMED CONTROL PANEL SHALL SIGNAL BOILER TO START. IF HOT WATER SUPPLY TEMPERATURE IS BELOW 140 DEGREES BOILER SHALL START ON LOW FIRE AND HOLD LOW FIRE UNTIL THE HOT WATER SUPPLY TEMPERATURE REACHES 140 DEGREES.

ONCE THE BOILER SUPPLY WATER TEMPERATURE REACHES 140 DEGREES CONTROL PANEL SHALL SEND A MODULATION SIGNAL TO BOILER BOILER CONTROL PANEL TO ACHIEVE THE HOT WATER SUPPLY TEMPERATURE SHOWN IN THE HOT WATER RESET SCHEDULE.

BOILER SHALL CONTINUE TO OPERATE UNTIL THE OUTDOOR AIR TEMPERATURE RISES TO 60 DEGREES. AT 60 DEGREES THE CONTROL PANEL SHALL INDEX THE BOILER OFF. THE HOT WATER PUMP SHALL CONTINUE TO RUN FOR THREE MINUTES AFTER THE BOILER IS INDEXED OFF.

KEY PLAN

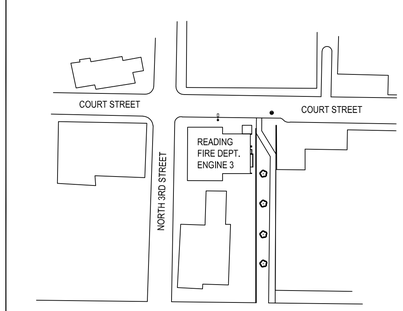

PRELIMINARY - NOT FOR CONSTRUCTION

BUCHART HORN
ENGINEERS • ARCHITECTS • PLANNERS

M E P E
Buchart Horn Architects
445 West Philadelphia Street
York, PA 17401
717.852.1400

READING FIRE DEPARTMENT ENGINE 3, 3 rd & COURT
GENERATOR / BOILER REPLACEMENT
15 N 3 rd STREET
READING, PA
DEPARTMENT OF PUBLIC WORKS, CITY OF READING, PENNSYLVANIA
815 WASHINGTON ST.
READING, PA

REVISIONS		
MARK	ISSUED DATE	DESCRIPTION

PROJECT NO:	81083-01
ISSUED DATE:	06/05/20
DRAWN BY:	RCM
CHECKED BY:	RCM

© BUCHART HORN, INC.

SHEET TITLE:

CONTROL DIAGRAMS

SHEET NO:

M-102

ELECTRICAL, COMMUNICATION, PROCESS CONTROL, AND ELECTRONIC SAFETY AND SECURITY SYMBOL LEGEND

LIGHTING

LIGHT FIXTURE : GENERAL

- CEILING SURFACE MOUNTED
- CEILING RECESSED
- CEILING PENDANT
- WALL MOUNTED

NIGHT LIGHT : FIXTURE WITH "NIGHT LIGHT" CONNECTED TO NORMAL OR NORMAL/EMERGENCY CIRCUIT

- CEILING SURFACE MOUNTED
- CEILING RECESSED
- CEILING PENDANT
- WALL MOUNTED

EMERGENCY : LIGHT FIXTURE CONNECTED TO NORMAL/EMERGENCY, EMERGENCY ONLY OR BATTERY INVERTER CIRCUIT

- CEILING SURFACE MOUNTED
- CEILING RECESSED
- CEILING PENDANT
- WALL MOUNTED

EMERGENCY BALLAST : LIGHT FIXTURE WITH EMERGENCY BATTERY BALLAST

- CEILING SURFACE MOUNTED
- CEILING RECESSED
- CEILING PENDANT
- WALL MOUNTED

EMERGENCY SOCKET : LIGHT FIXTURE WITH EMERGENCY ONLY SOCKET

- CEILING SURFACE MOUNTED
- CEILING RECESSED
- CEILING PENDANT
- WALL MOUNTED

FLOOD OR SPOT LIGHT :

CLG WALL

EXIT SIGN :

- ILLUMINATED FACE
- WALL MOUNTED - DIRECTIONAL ARROW AS REQUIRED
- SINGLE FACE, CEILING MOUNTED - DIRECTIONAL ARROW AS REQUIRED
- DUAL FACE, CEILING MOUNTED - DIRECTIONAL ARROWS AS REQUIRED

EMERGENCY LIGHTING UNIT :

- EMERGENCY LIGHTING UNIT - BATTERY TYPE WITH NUMBER OF HEADS AS INDICATED
- EMERGENCY LIGHTING UNIT - REMOTE HEAD WITH NUMBER OF HEADS AS INDICATED

TRACK LIGHTING:

N M S

- TRACK MOUNTED LIGHT FIXTURES - WITH FLOOD AND/OR SPOT TYPES
- FLOOD
  - M - MEDIUM
  - N - NARROW
  - W - WIDE SPOT
  - S - NORMAL
- FEED END
- HORIZONTAL/VERTICAL RUN

POWER DISTRIBUTION

SURFACE FLUSH

- PANELBOARD
- EQUIPMENT CABINET

CLG FLOOR WALL

- JUNCTION BOX
- BLANK OUTLET
- JUNCTION BOX OR BLANK OUT - ABOVE FLOOR, IN CAST BOX ON RIGID CONDUIT
- JUNCTION BOX OR BLANK OUT - ABOVE COUNTER
- CONTACTOR
- RELAY
- METER
- SURGE PROTECTION DEVICE
- ENCLOSED CIRCUIT BREAKER
- SAFETY SWITCH - NON-FUSED, 3-POLE, 30A, 600V UNO
- SAFETY SWITCH - FUSED, 3-POLE, 30A, 600V UNO
- COMBINATION STARTER / DISCONNECT - 3 PHASE
- MANUAL MOTOR STARTER (HP RATED) THE LETTERS ADJACENT TO THE SYMBOL INDICATE STARTER TYPE.
  - M - TOGGLE
  - MK - KEY OPERATED
  - MB - PUSHBUTTON
  - MT - TOGGLE WITH THERMAL OVERLOADS
- TRANSFORMER - 120V AND GREATER
- TRANSFORMER - LOW VOLTAGE
- MOTOR OR EQUIPMENT
- ELECTRIC SOLENOID VALVE - BY OTHERS (H-HOT WATER, C-COLD WATER, G-GAS)
- MAST HEAD
- CONDUIT SLEEVE - QUANTITY AND SIZE AS REQUIRED
- CABLE TRAY - WALL HUNG
- CABLE TRAY - CENTER HUNG
- EC — EMPTY CONDUIT- SEALED & CAPPED
- CIRCUIT
- HOMERUN TO PANELBOARD; PROVIDE 3 #12, #12 GRD, 3/4"C UNLESS NOTED OTHERWISE ON DRAWING, ON PANEL SCHEDULES, OR ONE LINE DIAGRAMS
- CIRCUIT - EQUIPMENT ON SAME CIRCUIT BUT SEPARATELY CONTROLLED

SITE

- POLE MOUNTED H.I.D. LIGHT FIXTURE - SINGLE HEAD WITH ARM BRACKET
- POLE MOUNTED H.I.D. LIGHT FIXTURE - DUAL HEAD WITH ARM BRACKET
- POLE MOUNTED H.I.D. LIGHT FIXTURE - SINGLE HEAD POST MOUNT
- BUILDING UPLIGHT FIXTURE
- BOLLARD LIGHT FIXTURE
- UNDERGROUND ELECTRICAL ENCLOSURE
- PAD MOUNT TRANSFORMER
- UTILITY POLE
- MH — MANHOLE/VAULT
- UGE — UNDERGROUND EMERGENCY/STANDBY GENERATOR SERVICE
- UPE — UNDERGROUND ELECTRIC SERVICE (PRIMARY)
- USE — UNDERGROUND ELECTRIC SERVICE (SECONDARY)
- UTC — UNDERGROUND CATV & TELEPHONE SERVICE
- SL — UNDERGROUND SITE LIGHTING CONDUIT
- EC — UNDERGROUND EMPTY CONDUIT
- BC — UNDERGROUND BRANCH CIRCUIT CONDUIT
- TC — TELECOMMUNICATION CONDUIT

WIRING DEVICES

SWITCH:

- $ — SINGLE POLE
- $3 — THE LETTERS/NUMBERS ADJACENT TO THE SYMBOL INDICATE SWITCH TYPE. SWITCHES ARE SINGLE POLE UNLESS IDENTIFIED OTHERWISE.
  - 3 - THREE-WAY
  - 4 - FOUR-WAY
  - B - TOUCHBOLT
  - CK - CARD KEY
  - D - DIMMER - INCANDESCENT
  - DF - DIMMER - FLUORESCENT
  - DL - DIMMER - LOW VOLTAGE
  - ET - ELECTRONIC TAP
  - K - KEY OPERATED
  - MC - MAINTAINED CONTACT
  - P - PILOT LIGHT
  - R - LOCAL REMOTE CONTROL
  - WP - WEATHERPROOF
  - X - EXPLOSION PROOF

OCCUPANCY SENSOR:

- $OC — SWITCH - PIR WITH PUSHBUTTON
- $OC1 — THE LETTERS/NUMBERS ADJACENT TO THE SYMBOL INDICATE SWITCH SENSOR TYPE. SWITCH SENSORS ARE PIR TYPE UNLESS IDENTIFIED OTHERWISE.
  - OC1 - DUAL TECHNOLOGY WITH 1 PUSHBUTTON
  - OC2 - DUAL TECHNOLOGY WITH 2 PUSHBUTTONS FOR DUAL CONTROL

CLG WALL

- RADIAL - AUTO ON/OFF
- DIRECTIONAL - AUTO ON/OFF
- THE LETTERS ADJACENT TO THE SYMBOL INDICATES SENSOR TYPE. WHERE SENSOR SYMBOL IS SHOWN WITHOUT IDENTIFICATION, PROVIDE PIR FOR WALL TYPES AND DT FOR CEILING TYPES.
  - DT - DUAL TECHNOLOGY (COMBINATION PIR & US)
  - ER - EXTENDED RANGE
  - HB - HIGHBAY
  - HH - HIGH HUMIDITY / LOW TEMPERATURE
  - HW- HALLWAY
  - PIR- PASSIVE INFRARED
  - R - RELAY
  - US - ULTRASONIC OR MICROPHONIC
  - WP- WEATHERPROOF
  - WV- WIDE VIEW
- P — POWER PACT

PHOTO/DAYLIGHT SENSOR:

- PHOTO SENSOR - WALL MTD (MOUNTED ON NORTH FACE OF BUILDING)
- PHOTO SENSOR - CEILING MTD

RECEPTACLE:

CLG FLOOR WALL

- SINGLE
- DUPLEX
- DOUBLE DUPLEX
- GFCI
- GFCI DOUBLE DUPLEX
- SPD (ISOLATED GROUND)
- SPD DOUBLE DUPLEX
- TAMPER RESISTANT
- SPLIT WIRED
- 30A — SINGLE PHASE, 480V RATED WITH AMPERAGE AS INDICATED
- 40A — THREE PHASE, 480V RATED WITH AMPERAGE AS INDICATED
- 72" — NUMBER ADJACENT TO SYMBOL INDICATES MOUNTING HEIGHT A.F.F.
- C — LETTER "C" ADJACENT TO SYMBOL INDICATES RECEPTACLE ABOVE COUNTER
- ABOVE FLOOR, IN CAST BOX ON RIGID CONDUIT - RECEPTACLE TYPE AS SHOWN

WIRING DEVICES (CONTINUED)

PUSHBUTTON:

- STANDARD
- E — THE LETTER ADJACENT TO THE SYMBOL INDICATES TYPE. PUSHBUTTONS ARE STANDARD UNLESS IDENTIFIED OTHERWISE.
  - E - EMERGENCY
  - K - EMERGENCY, KEY OPERATED
  - P - PANIC/ENTRANCE

MISCELLANEOUS:

- P — POWER POLE - WITH WIRING DEVICES AS INDICATED
- P/T — POWER/TELECOM POLE - WITH WIRING DEVICES AS INDICATED
- FURNITURE PEDESTAL - WITH WIRING DEVICES AS INDICATED
- FIRE RATED POKE-THROUGH - WIRING DEVICES AND TELECOM OUTLETS AS INDICATED
- FLUSH FLOOR BOX - WIRING DEVICES AND TELECOM OUTLETS AS INDICATED
- SURFACE RACEWAY WITH WIRING DEVICES AS INDICATED
  - VERTICAL DROP
  - HORIZONTAL RUN
- SURFACE MOUNTED RACEWAY MOUNTED - WIRING DEVICES AS INDICATED
  - SURFACE RACEWAY

FIRE ALARM

CLG WALL

- SMOKE DETECTOR
- HEAT DETECTOR
- CARBON MONOXIDE DETECTOR
- NUMBER ADJACENT TO SYMBOL INDICATES ZONE, IF REQUIRED
- LETTER ADJACENT TO SYMBOL INDICATES PREFERRED DETECTOR TYPE:
  - D -DOOR
  - P -PREACTION
  - R -ELEVATOR RECALL
  - RE - SHAFT & EXHAUST ELEVATOR RECALL
  - RS - ELEVATOR RECALL & SPRINKLER ACTIVATION
- DUCT DETECTOR - SMOKE (NUMBER INDICATES ZONE, IF REQUIRED)
- DUCT DETECTOR - HEAT (NUMBER INDICATES ZONE, IF REQUIRED)

CLG WALL

- AUDIBLE WITH VISUAL UNIT
- AUDIBLE ONLY UNIT
- VISUAL ONLY UNIT
- MANUAL PULL STATION (NUMBER INDICATES ZONE IF REQUIRED)
- MANUAL PULL STATION - KEY OPERATED
- MANUAL PULL STATION WITH CLEAR PROTECTIVE COVER
- DOOR HOLDER (F-FLOOR, C-CEILING, W-WALL)
- CONTROL MODULE - ZONE
- CONTROL MODULE - ADDRESSABLE
- REMOTE TEST STATION - WALL MTD
- REMOTE TEST STATION - CEILING MTD
- LETTER L INDICATES TEST LIGHT
- FIRE SUPPRESSION FLOW SWITCH - BY OTHERS
- FIRE SUPPRESSION TAMPER SWITCH - BY OTHERS

SURFACE FLUSH

- FACP — FIRE ALARM CONTROL PANEL

TELECOMMUNICATION/NETWORK

CLG FLOOR WALL

- VOICE/DATA OUTLET - BLANK
- DATA OUTLET - BLANK
- TELEPHONE (VOICE) OUTLET - BLANK
- W — TELEPHONE OUTLET - LETTER 'W' ADJACENT TO SYMBOL INDICATES OUTLET FOR WALL HUNG PHONE
- 2 — NUMBER ADJACENT TO SYMBOL INDICATES NUMBER OF ACTIVE PORTS: 2, 4, 6 OR 8
- C — LETTER "C" ADJACENT TO SYMBOL INDICATES OUTLET ABOVE COUNTER
- F — LETTER "F" ADJACENT TO SYMBOL INDICATES FIBER OPTIC OUTLET
- 12" — NUMBER ADJACENT TO SYMBOL INDICATES MOUNTING HEIGHT A.F.F.
- D — VOICE/DATA POLE - TELECOM OUTLETS AS INDICATED
- P/T — POWER/TELECOM POLE - TELECOM OUTLETS AS INDICATED
- FURNITURE PEDESTAL - TELECOM OULTES AS INDICATED
- SURFACE MOUNTED RACEWAY MOUNTED - TELECOM OUTLETS AS INDICATED
  - SURFACE RACEWAY

SURFACE FLUSH

- TEC — TELECOM/NETWORK EQUIPMENT CABINET
- TEC EQUIP RACK — TELECOM/NETWORK EQUIPMENT RACK
- TELECOM/NETWORK BACKBOARD

PROCESS CONTROL DEVICES

MOV 113 — MCC-3 PNL

- TYPE LETTER SHOWN IN LIST BELOW
- NUMBER OF #14 DIGITAL SIGNAL WIRES INCLUDING A #14 GRD IN 3/4"C UNO (BLANK IF NONE). CONDUITS TO/FROM* SAME AREA MAY BE COMBINED; EC TO CONFORM TO NEC FOR CONDUIT SIZES. 24V AND 120V SHALL BE SEPARATED INTO SEPARATE CONDUITS. WIRES NOT USED ARE SPARES
- ASSOCIATED POWER SOURCE (BLANK IF NONE)
- NUMBER OF 2/C #16 TSP ANALOG SIGNAL CABLES IN 3/4"C UNO (BLANK IF NONE). CONDUITS TO/FROM* SAME AREA MAY BE COMBINED; EC TO CONFORM TO NEC FOR CONDUIT SIZES. CABLES NOT USED ARE SPARES

* - SEE INSTRUMENTATION DEVICE LIST ON EACH SHEET FOR DIGITAL AND ANALOG SIGNAL DESTINATION

LIST OF COMMON PROCESS DEVICES

- BTS - BOWL TEMPERATURE SWITCH
- CGS - COMBUSTIBLE GAS SENSOR/TRANSMITTER
- CTS - CABINET TEMPERATURE SWITCH
- DPS - DIFFERENTIAL PRESSURE SWITCH
- DSD - OVERHEAD DOOR SAFETY DEVICE
- EL - EMERGENCY STOP LANYARD
- ESP - EMERGENCY STOP PUSH BUTTON
- FLS - FLOODING LEVEL SENSOR
- FS - FLOW SWITCH
- GFM - GAS FLOW METER
- LS - LEVEL SWITCH (FLOAT)
- LTS - LIMIT SWITCH
- MM - MAGNETIC FLOW METER
- MOG - MOTOR OPERATED GATE
- MOV - MOTOR OPERATED VALVE
- MT - MOTOR TEMPERATURE SWITCH
- OLS - OIL LEVEL SWITCH
- POS - POSITION SWITCH
- PS - PRESSURE SWITCH
- PT - PRESSURE TRANSMITTER
- RL - RADAR LEVEL PROBE
- S - SOLENOID VALVE
- SL - SUBMERSIBLE LEVEL PROBE
- SLP - SEAL LEAK PROBE
- SM - SUCTION MONITOR
- T - TRANSMITTER
- TP - TEMPERATURE PROBE
- UF - ULTRASONIC FLOW METER
- UL - ULTRASONIC LEVEL PROBE
- VFM - VENTRUI FLOW METER
- ZS - ZERO SPEED SWITCH

WIRING DIAGRAMS

- WIRES NOT CONNECTED
- CONNECTING WIRES

SECURITY/ACCESS/SURVEILLANCE

CLG WALL

- AUDIBLE WITH VISUAL UNIT
- AUDIBLE ONLY UNIT
- VISUAL ONLY UNIT
- 110 — THE NUMBER ADJACENT TO THE SYMBOL INDICATES PREFERRED CANDELA VALUE. VISUAL SYMBOL WITHOUT IDENTIFICATION SHALL BE AS FOLLOWS:
  - CORRIDORS / HALLWAYS - 30 CANDELA
  - ROOMS <= 2,000 SQFT - 75 CANDELA
  - ROOMS > 2,000 SQFT - 110 CANDELA

CLG WALL

- MONITOR
- CAMERA
- 72" — NUMBER ADJACENT TO SYMBOL INDICATES MOUNTING HEIGHT A.F.F.

CLG WALL

- 2 — MOTION DETECTOR (NUMBER INDICATES ZONE IF REQUIRED)
- SS — SPEAKER
- INTERCOM STATION - WALL MTD
- M — INTERCOM STATION - MASTER
- 2 — MAGNETIC DOOR CONTACTS (NUMBER INDICATES ZONE IF REQUIRED)
- B — PUSHBUTTON
- K — KEYPAD
- CR — CARD/PROXIMITY READER
- BR — BIOMETRIC READER
- MP — MULTIPLEXER
- L — ELECTRIC LOCK - BY OTHERS
- S — ELECTRIC STRIKE - BY OTHERS

SURFACE FLUSH

- SECP — SECURITY EQUIPMENT CABINET

GENERAL

- RISER, OR ONE LINE NOTE NUMBER (E.G., SEE RISER NOTE NO. E1) — E1
- SHEET KEYNOTE (NEW CONSTRUCTION) — 1
- DEMOLITION KEYNOTE — 1
- REVISION SEQUENCE NUMBER — 1
- ROOM TAG (ROOM NO NOT ALWAYS SHOWN) — ROOM NAME 101
- EQUIPMENT TAG — AHU-2
- SECTION/ ELEVATION REFERENCE — VIEW REF #; SHEET REF A-XXX
- INTERIOR ELEVATION REFERENCE — VIEW REF -; SHEET REF AXXX -
- DETAIL / CALLOUT REFERENCE — VIEW REF #; SHEET REF #

BOX TAG/NOTE REFERENCE

BOXED TAG(S)/NOTE(S) BELOW THE ROOM NAME/NUMBER OR PLACED IN THE SPACE INDICATE THAT THE INFORMATION IN THE BOX APPLIES TO ALL FIXTURES AND/OR RECEPTACLES IN THE ROOM/SPACE UNLESS NOTED OTHERWISE.

- PANEL NAME — RA 60 / P1 6 / LSA 10
  - LIGHT FIXTURE DESIGNATOR (ONLY ON LIGHTING PLANS)
  - POWER CIRCUIT FOR RECEPTACLES OR LIGHTING FIXTURES
  - EMERGENCY CIRCUIT (IF REQUIRED)
- KEY NOTE (TYP.) — 2 4

SYMBOLS LEGEND NOTES:

A. NOT ALL SYMBOLS INDICATED MAY APPEAR ON THESE CONTRACT DRAWINGS.

B. DASHED SYMBOLS REPRESENT EXISTING EQUIPMENT OR EQUIPMENT NOT IN CONTRACT.

PRELIMINARY - NOT FOR CONSTRUCTION

BUCHART HORN
ENGINEERS • ARCHITECTS • PLANNERS

MEP/F
Buchart Horn Architects
445 West Philadelphia Street
York, PA 17401
717.852.1400

READING FIRE DEPARTMENT ENGINE 3, 3 rd & COURT
GENERATOR / BOILER REPLACEMENT
15 N 3rd STREET
READING, PA

DEPARTMENT OF PUBLIC WORKS, CITY OF READING, PENNSYLVANIA
815 WASHINGTON ST.
READING, PA

REVISIONS		
MARK	ISSUED DATE	DESCRIPTION

PROJECT NO:	81083-01
ISSUED DATE:	06/05/20
DRAWN BY:	WCA
CHECKED BY:	JJG

© BUCHART HORN, INC.

SHEET TITLE:

ELECTRICAL SYMBOLS LEGEND

SHEET NO: E-001

ELECTRICAL ABBREVIATIONS, MOUNTING HEIGHTS, AND GENERAL LAYOUT NOTES

ELECTRICAL ABBREVIATIONS

NUMBER	
1PH	SINGLE-PHASE
1Ø	SINGLE-PHASE
1P	SINGLE POLE
2/C	TWO-CONDUCTOR
2WAY	TWO-WAY
3/C	THREE-CONDUCTOR
3PH	THREE-PHASE
3Ø	THREE-PHASE
4/C	FOUR-CONDUCTOR
4PDT	FOUR-POLE DOUBLE THROW
4PST	FOUR-POLE SINGLE THROW
4W	FOUR-WIRE
A	
A	AMPERE
A/E	ARCHITECT/ENGINEER
ABBRV	ABBREVIATION
AC	ALTERNATING CURRENT
ADA	AMERICANS WITH DISABILITIES ACT
AF	AMPERE FRAME
AFC	ABOVE FINISHED COUNTER
AFF	ABOVE FINISHED FLOOR
AFFF	ABOVE FINISHED FIRST FLOOR
AFG	ABOVE FINISHED GRADE
AFR	ABOVE FINISHED ROOF
AFS	ABOVE FINISHED SLAB
AHJ	AUTHORITY HAVING JURISDICTION
AIC	AMPERE INTERRUPTING CAPACITY
ALT	ALTERNATE
ALT NO	ALTERNATE NUMBER
AMP	AMPERE
APPROX	APPROXIMATE
AT	AMPERE TRIP
ATC	AUTOMATIC TEMP CONTROL
ATS	AUTOMATIC TRANSFER SWITCH
AUX	AUXILIARY
AV	AUDIO VISUAL
AVG	AVERAGE
AWG	AMERICAN WIRE GAUGE
B	
BAS	BUILDING AUTOMATION SYSTEM
BFF	BELOW FINISH FLOOR
BFG	BELOW FINISHED GRADE
BHP	BRAKE HORSEPOWER
BKBD	BACKBOARD
BKR	BREAKER
BLDG	BUILDING
BLW	BELOW
BOS	BOTTOM OF STEEL
C	
C	CELSIUS OR CONDUIT
CATV	COMMUNITY ANTENNA TELEVISION
CB	CIRCUIT BREAKER
CCTV	CLOSED CIRCUIT TELEVISION
CFM	CUBIC FEET PER MINUTE
CL	CENTER LINE
CLF	CURRENT LIMITING FUSE
CLG	CEILING
CMU	CONCRETE MASONRY UNIT
CO	COMPANY
COAX	COAXIAL CABLE
COL	COLUMN
COMM	COMMUNICATION
CPT	CONTROL POWER TRANSFORMER
CRI	COLOR RENDERING INDEX
CT	CURRENT TRANSFORMER
CU	COPPER
CU FT	CUBIC FEET
CU YD	CUBIC YARD
D	
D	DEEP or DEPTH
DB	DECIBEL
DC	DIRECT CURRENT
DDC	DIRECT DIGITAL CONTROL
DEG	DEGREE
DEG C	DEGREES CELSIUS
DEG F	DEGREES FAHRENHEIT
DEMO	DEMOLITION
DIA	DIAMETER
DISC	DISCONNECT

DISTR	DISTRIBUTION
DIV	DIVISION
DL	DAMP LOCATION
DN	DOWN
DPDT	DOUBLE POLE, DOUBLE THROW
DPST	DOUBLE POLE, SINGLE THROW
DT	DOUBLE THROW
DWG	DRAWING
E	
E	EAST OR EMERGENCY
EA	EACH
EC	ELECTRICAL CONTRACTOR
EFF	EFFICIENCY
ELEC	ELECTRIC
EMER	EMERGENCY
EMI	ELECTROMAGNETIC INTERFERENCE
EMS	ENERGY MANAGEMENT SYSTEM
ENCL	ENCLOSURE
EO	ELECTRICALLY OPERATED
EPA	ENVIR PROTECTION AGENCY
EPO	EMERGENCY POWER OFF
EP	EXPLOSION PROOF
EQ	EQUAL
EQUIP	EQUIPMENT
EQUIV	EQUIVALENT
ETC	AND SO FORTH or ET CETERA
EW	EACH WAY
EXST or EXIST	EXISTING
F	
F	FAHRENHEIT
FA	FIRE ALARM
FAAP	FIRE ALARM ANNUNCIATOR PANEL
FACP	FIRE ALARM CONTROL PANEL
FC	FOOTCANDLE
FDR	FEEDER
FED	FEDERAL
FFA	FROM FLOOR ABOVE
FFB	FROM FLOOR BELOW
FLA	FULL LOAD AMPS
FLR	FLOOR
FM	FACTORY MUTUAL
FPC	FIRE PROTECTION CONTRACTOR
FREQ	FREQUENCY
FT	FEET OR FOOT
FVNR	FULL VOLTAGE NON-REVERSING
FVR	FULL VOLTAGE REVERSING
G	
G	GROUND
GC	GENERAL CONTRACTOR
GEN	GENERATOR
GFCI	GROUND FAULT CIRC INTERRUPTER
GRD	GROUND
H	
H	HIGH
HAZ	HAZARD
HD	HEAVY DUTY
HDPE	HIGH DENSITY POLYETHYLENE
HOA	HAND-OFF-AUTOMATIC
HP	HORSEPOWER
HR	HOUR
HT	HEIGHT
HV	HIGH VOLTAGE
Hz	HERTZ (FREQUENCY)
I	
I/O	INPUT/OUTPUT
IBC	INTERNATIONAL BUILDING CODE
ID	INSIDE DIAMETER
ID NO	IDENTIFICATION NUMBER
IN	INCHES
INTERCOM	INTERCOMMUNICATION
INV	INVERTER
IR	INFRARED
J	
JB	JUNCTION BOX
K	
K	KILO OR KELVIN OR THOUSAND
KHZ	KILOHERTZ
KO	KNOCKOUT
KV	KILOVOLT
KVA	KILOVOLT AMPERE

KVAH	KILOVOLT AMPERE PER HOUR
KVAR	KILOVOLT AMPERE REACTIVE
KW	KILOWATT
KWH	KILOWATT HOUR
KWHM	KILOWATT HOUR METER
L	
L	LONG OR LOCKABLE
LA	LIGHTNING ARRESTER
LB or LBS	POUND(S)
LED	LIGHT EMITTING DIODE
LF	LINEAR FEET (FOOT)
LIN	LINEAR
LP	LIGHT POLE
LPW	LUMENS PER WATT
LRA	LOCKED ROTOR AMPS
LT	LEFT
LTG	LIGHTING
LV	LOW VOLTAGE
M	
mA	MILLIAMPERE
MAT	MATERIAL
MATV	MASTER ANTENNA TV SYSTEM
MAX	MAXIMUM
MCB	MAIN CIRCUIT BREAKER
MC	MECHANICAL CONTRACTOR
MCA	MINIMUM CIRCUIT AMPS
MCC	MOTOR CONTROL CENTER
MECH	MECHANICAL
MFA	MAXIMUM FUSE AMPS
MFR	MANUFACTURER
MG	MOTOR GENERATOR
MH	MANHOLE OR METAL HALIDE
MHz	MEGAHERTZ
MIC	MICROPHONE
MIN	MINIMUM OR MINUTE
MISC	MISCELLANEOUS
MLO	MAIN LUGS ONLY
MOCP	MAX OVERCURRENT PROTECTION
MOD	MOTOR OPERATED DAMPER
MOP	MAX OVERCURRENT PROTECTION
MTD	MOUNTED
MTS	MANUAL TRANSFER SWITCH
MV	MILLIVOLT
MVA	MEGAVOLT-AMPERE
mW	MILLIWATT
MW	MEGAWATT
MWH	MEGAWATT HOUR
N	
N	NORTH OR NEUTRAL
NA or N/A	NOT APPLICABLE
NC or N/C	NORMALLY CLOSED
NE	NORMAL/EMERGENCY
NEC	NATIONAL ELECTRICAL CODE
NEG	NEGATIVE
NEUT	NEUTRAL
NFPA	NATIONAL FIRE PROTECTION ASSOC
NF	NONFUSED
NIC	NOT IN CONTRACT
NL	NIGHT LIGHT
NO	NUMBER
NO or N/O	NORMALLY OPEN
NOM	NOMINAL
NTS	NOT TO SCALE
O	
OC	ON CENTER
OD	OUTSIDE DIAMETER
OL	OVERLOAD
P	
P	PENDANT OR POLE
PA	PUBLIC ADDRESS
PB	PULL BOX OR PUSHBUTTON
PC	PLUMBING CONTRACTOR
PCU	POWER CONDITIONING UNIT
PE	PROFESSIONAL ENGINEER
PEC	PHOTOELECTRIC CELL
PF	POWER FACTOR
PFFB	PROVISION FOR FUTURE BREAKER
PH	PHASE
PL	PROPERTY LINE
PN	PART NUMBER

PNL	PANEL
PO	PURCHASE ORDER
POCC	POINT OF COMMON COUPLING
PRELIM	PRELIMINARY
PRI	PRIMARY
PT	POTENTIAL TRANSFORMER
PV	PHOTOVOLTAIC
PWR	POWER
Q	
QA/QC	QUAL ASSURANCE/QUAL CONTROL
QTY	QUANTITY
R	
R	RADIUS
RCP	REFLECTED CEILING PLAN
RECPT	RECEPTACLE
REV	REVISION
RF	RADIO FREQUENCY
RFI	REQUEST FOR INFORMATION
RM	ROOM
ROW	RIGHT OF WAY
RPM	REVOLUTIONS PER MINUTE
RT	RIGHT
S	
S	SOUTH
SCH or SCHED	SCHEDULE
SCR	SEMICONDUCTOR CONTROLLED RECTIFIER
SEC	SECOND OR SECONDARY
SPD	SURGE PROTECTION DEVICE
SPDT	SINGLE POLE, DOUBLE THROW
SPEC	SPECIFICATION
SPST	SINGLE POLE, SINGLE THROW
SQ	SQUARE
SQ FT	SQUARE FOOT (FEET)
SQ IN	SQUARE INCH
SQ YD	SQUARE YARD
ST	SHUNT TRIP OR SINGLE THROW
STD	STANDARD
STP	SHIELDED TWISTED PAIR
SWBD	SWITCHBOARD
SWGR	SWITCHGEAR
T	
TEL	TELEPHONE
TEMP	TEMPERATURE
TFA	TO FLOOR ABOVE
TFB	TO FLOOR BELOW
TL	TWIST LOCK
TV	TELEVISION
TYP	TYPICAL
U	
UL	UNDERWRITERS LABORATORIES
UNO	UNLESS NOTED OTHERWISE
UPS	UNINTERRUPTIBLE POWER SUPPLY
UTP	UNSHIELDED TWISTED PAIR
V	
V	VOLT
VA	VOLT AMPERE
VAM	VOLT-AMMETER
VAR	VARIES
VAR	VOLT AMPERE REACTIVE
VD	VOLTAGE DROP
VF	VARIABLE FREQUENCY
VFD	VARIABLE FREQUENCY DRIVE
VOLTS	VOLTAGE
VR	VOLTAGE REGULATOR
W	
W	WATT OR WIRE
W/	WITH
W/O	WITHOUT
WL	WET LOCATION
WP	WEATHERPROOF
WT	WATERTIGHT OR WEIGHT
X	
XFER	TRANSFER
XFMR	TRANSFORMER
Y	
Y	WYE
YR	YEAR
Z	

NOTE: NOT ALL ABBREVIATIONS OR TERMS INDICATED ARE USED ON THESE CONTRACT DOCUMENTS.

EQUIPMENT ABBRV

A	
AHU	AIR HANDLING UNIT
B	
B	BOILER
BC	BLOWER COIL UNIT
BFWP	BOILER FEEDWATER PUMP
C	
CFU	CHEMICAL FEED UNIT
CH	CHILLER
CHWP	CHILLED WATER PUMP
CT	COOLING TOWER
CU	CONDENSING UNIT
CUH	CABINET UNIT HEATER
D	
DH	DUCT HEATER
DWH	DOMESTIC WATER HEATER
E	
EBB	ELECTRIC BASEBOARD
ECU	EVAPORATIVE COOLING UNIT
EF	EXHAUST FAN
EHC	ELECTRIC HEATING COIL
EHD	ELECTRIC HAND DRYER
EHP	ELECTRIC HEATING PANEL
ELEV	ELEVATOR
ERU	ENERGY RECOVERY UNIT
EUH	ELECTRIC UNIT HEATER
EWC	ELECTRIC WATER COOLER
F	
FCU	FAN COIL UNIT
FOP	FUEL OIL PUMP
G	
GUH	GAS FIRED UNIT HEATER
H	
H	HUMIDIFIER
HC	HEATING COIL
HP	HEAT PUMP
HRU	HEAT RECOVERY UNIT
HWCP	HOT WATER CIRC PUMP
HWP	HOT WATER PUMP
I	
IF	INTAKE FAN
IRH	INFRARED HEATER
IWH	INSTANTANEOUS WATER HTR
J	
JP	JOCKEY PUMP
L	
L	AUTOMATIC FAUCET SENSOR
M	
MAU	MAKE UP AIR UNIT
MOD	MOTOR OPERATED DAMPER
O	
OHD	OVERHEAD DOOR
P	
P	PUMP
PHC	PREHEAT COIL
R	
RAF	RETURN AIR FAN
REF	REFRIGERATOR
RHC	REHEAT COIL
RTU	ROOF TOP UNIT
S	
SCU	SELF CONTAINED UNIT
SD	SMOKE DAMPER
SF	SUPPLY FAN
SP	SUMP PUMP
SS	SPLIT SYSTEM FAN
T	
TC	TRASH COMPACTOR
TMV	THERMOSTATIC MIXING VALVE
U	
UH	UNIT HEATER
UV	UNIT VENTILATOR
V	
VAV	VARIABLE AIR VOLUME BOX
VRP	VACUUM RETURN PUMP
W	
WH	WALL HEATER

WIRE SEPARATION NOTES

1. ANALOG, DIGITAL, AND LOW VOLTAGE POWER CIRCUITS TO BE RUN IN SEPARATE RACEWAYS OR CABLE SETS AS INDICATED.
2. SEPARATE WIRING BY LEVEL AS OUTLINED BELOW:

   LEVEL 1-1 ANALOG SIGNALS LESS THAN 50V AND LESS THAN 50mA
   4-20mA SHIELDED INSTRUMENTATION.
   SHIELDED LOW VOLTAGE INSTRUMENTATION.
   VARIABLE SPEED DRIVE SPEED SIGNALS.

   LEVEL 1-2 DIGITAL SIGNAL AND DATA BUSSES.
   PROGRAMMABLE LOGIC CONTROLLER BUSSES.
   METER SYSTEM DATA BUS.
   INSTRUMENTATION REMOTE TERMINAL UNIT BUS.

   LEVEL 2-1 ANALOG SIGNALS OVER 50V AND LESS THAN 240V.
   TACHOMETER GENERATORS.

   LEVEL 2-2 DIGITAL AND DISCRETE INPUTS TO PROGRAMMABLE LOGIC CONTROLLERS AND REMOTE TERMINAL UNITS. ALL OUTPUTS SUPPLYING RELAY COILS SHALL HAVE SURGE SUPPRESSION.

   LEVEL 3-1 POWER CIRCUITS OF 20A OR LESS AND 120V OR LESS.
   LIGHTING AND RECEPTACLE CIRCUITS TO BE IN A SEPARATE CONDUIT UNO.
   CLASS 1 CONTROL CIRCUITS ORIGINATING IN AN MCC COMPARTMENT OR A MOTOR STARTER CAN BE ROUTED WITH POWER CIRCUIT FROM SAME COMPARTMENT.

   LEVEL 4-1 POWER CIRCUITS OVER 20A UP TO 400A, LESS THAN 600V. EACH SHALL BE RUN IN SEPARATE CONDUITS.

   LEVEL 5-1 FEEDERS OVER 400A.
3. EACH LEVEL INDICATED ABOVE TO BE INSTALLED IN SEPARATE RACEWAY OR CABLE SET UNLESS NOTED OTHERWISE OR INDICATED BY THESE CONTRACT DOCUMENTS.
4. WHERE DIFFERENT LEVEL SYSTEMS ARE INSTALLED IN PARALLEL RUNS EXCEEDING FIVE (5) FEET OR LONGER, PROVIDE PHYSICAL SEPARATION AS SHOWN IN THE TABLE.
5. IN ALL JUNCTION/PULL BOXES WITH MULTIPLE VOLTAGES, PROVIDE GROUNDED METALLIC BARRIERS TO MAINTAIN SEPARATION.
6. ONLY EXTERNAL INTERFACE SIGNALS ARE SHOWN FOR MOTOR/CONTROLLER STARTERS, PROGRAMMABLE DEVICES, AND VARIABLE SPEED DRIVES (VFD). INTERNAL SIGNALS NECESSARY FOR CORRECT FUNCTIONING MUST BE PROVIDED AND COORDINATED WITH ALL REQUIREMENTS.
7. ALL INTERCONNECTING WIRING AND TERMINATIONS BETWEEN EQUIPMENT BY CONTRACTOR UNO.
8. CONTRACTOR SHALL PROVIDE THE OWNER WITH A FULL SIZE SET OF LOOP AND INTERFACE WIRING DIAGRAMS WITH FILLED IN TERMINAL BLOCK AND WIRE NUMBERS.
9. REFER TO WIRE SEPARATION NOTED FOR COMBINING WIRING.

	LEVEL 1	2	3	4	5
LEVEL 1	0	1"	3"	12"	12"
2	1"	0	3"	9"	12"
3	3"	3"	0	3"	6"
4	12"	9"	3"	0	0

GENERAL ELECTRICAL NOTES

A. COORDINATE INSTALLATION OF NEW ITEMS AND EQUIPMENT WITH THE OWNER'S REPRESENTATIVE, MAINTENANCE STAFF, AND THE WORK OF OTHER CONTRACTORS. THE CONTRACTOR SHALL INCUR ALL COSTS ASSOCIATED WITH THE RELOCATION OF EQUIPMENT CONFLICTING WITH NEW WORK BY OTHER DISCIPLINES THAT HAS NOT BEEN COORDINATED.

B. FIELD VERIFY ALL DIMENSIONS. DRAWINGS ARE ILLUSTRATIVE AND MAY NOT REFLECT EXACT CONDITIONS OR DIMENSIONS.

C. DO NOT SCALE THE DRAWINGS. DRAWINGS ARE DIAGRAMMATIC AND SHOW THE GENERAL ARRANGEMENT OF EQUIPMENT AND SYSTEMS. THEY ARE NOT INTENDED TO SHOW EVERY OFFSET, FITTING AND COMPONENT. DO NOT USE THE PLANS FOR EXACT LOCATION OF EQUIPMENT, FIXTURES OR ARCHITECTURAL ITEMS SUCH AS WALLS, WINDOWS, SOFFITS, AND PILASTERS. SPECIFIC LOCATIONS, MOUNTING HEIGHTS AND OVERALL DIMENSIONS OF DEVICES AND FIXTURES ARE TO BE OBTAINED FROM THE ARCHITECTURAL DRAWINGS AND DETAILS WHEN AVAILABLE.

D. DRAWINGS SPECIFIC TO THIS TRADE DO NOT LIMIT THE RESPONSIBILITY OR WORK REQUIRED BY THE CONTRACT DOCUMENTS. REFER TO DRAWINGS AND SPECIFICATIONS OF OTHER TRADES FOR COMPLETE INFORMATION PRIOR TO BID.

E. WHERE CONFLICTS EXIST AMONG DRAWINGS, SPECIFICATIONS AND EQUIPMENT SCHEDULES, THE MOST STRINGENT SHALL APPLY. NOTIFY THE ENGINEER OF ALL CONFLICTS FOR RESOLUTION OR INTERPRETATION.

F. NOTIFY THE OWNER IN WRITING AND FIELD VERIFY CONDITIONS BEFORE PERFORMING ANY SAWCUTTING, TRENCHING, CORING OR ANY OTHER STRUCTURAL MODIFICATIONS. INSURE THAT NO ADVERSE EFFECT TO THE BUILDING'S STRUCTURAL INTEGRITY WILL OCCUR.

G. BRANCH CIRCUIT SIZING FROM DISCONNECT, STARTER OR VFD, OR CONTROL PANEL TO MOTOR/EQUIPMENT SHALL MATCH WHAT IS SHOWN FROM MCC/PANELBOARD TO DISCONNECT, STARTER OR VFD, OR CONTROL PANEL UNO. MOTOR BRANCH CIRCUITS FED FROM VFD SHALL BE VFD CABLE IN APPROPRIATELY SIZED CONDUIT.

H. ALL EQUIPMENT INSTALLED WITHIN AREAS THAT ARE LISTED AS CLASSIFIED AREAS SHALL BE UL LISTED AND LABELED FOR INSTALLATION IN THAT AREA. ALL CONDUIT TRANSITIONING FROM CLASSIFIED AREAS TO UNCLASSIFIED AREAS SHALL HAVE PROPER SEAL OFF FITTINGS.

I. ALL WORK SHOWN IN BOLD IS NEW WORK OR MODIFICATION OF EXISTING INSTALLATIONS TO BE COMPLETED BE THE CONTRACTOR UNDER THIS PROJECT. SEE PROJECT SPECIFICATIONS, SEQUENCE / PHASING OF WORK, AND DIVISION 1 FOR ADDITIONAL REQUIREMENTS FOR THIS PROJECT. CONTRACTOR SHALL READ AND UNDERSTAND THE REQUIREMENTS BEFORE SUBMITTING BID OR COMPLETING CONTRACTOR WORK.

MOUNTING HEIGHTS

LIGHTING

EMERGENCY BATTERY UNIT - WALL
18" BELOW CEILING OR 8'-0" ABOVE FINISHED FLOOR, WHICHEVER IS LOWER

EMERGENCY LIGHT - REMOTE HEAD
12" BELOW CEILING OR 8'-0" ABOVE FINISHED FLOOR, WHICHEVER IS LOWER

EXIT SIGN - WALL
6" ABOVE DOOR JAMB BUT NO HIGHER THAN 8'-0" ABOVE FINISHED FLOOR

LIGHT FIXTURE - WALL
SEE SPECIFICATIONS OR LIGHT FIXTURE SCHEDULE FOR MOUNTING HEIGHT

LIGHTING CONTROL PANEL - WALL
TOP OF TRIM 6'-0" ABOVE FINISHED FLOOR. IF CABINET IS OVER 6'-0" TALL, MOUNT BOTTOM EDGE 6" ABOVE FINISHED FLOOR

WIRING DEVICES

CLOCK RECEPTACLE
7'-0" ABOVE FINISHED FLOOR

MOTION SENSOR - WALL
8'-0" ABOVE FINISHED FLOOR OR AS RECOMMENDED BY MANUFACTURER

PHOTOELECTRIC CELL - WALL
12" FROM TOP OF ROOM ON NORTH FACE OF BUILDING

PUSHBUTTON - WALL
SAME AS LIGHTING SWITCHES

RECEPTACLE - WALL
RECEPTACLES OCCURRING IN STRUCTURAL TILE, BRICK, OR BLOCK WALL SHALL BE LOCATED ABOVE MASONRY JOINTS NEAREST THE APPROPRIATE MOUNTING HEIGHT AS INDICATED BELOW

FINISHED SPACE STANDARD
18" ABOVE FINISHED FLOOR. WHERE INTERFERENCE WITH HEATING EQUIPMENT REQUIRES HIGHER MOUNTING, MOUNT AS DIRECTED BY THE ENGINEER

COUNTERS
6" ABOVE BACK SPLASH OR COUNTER. CONSTRUCTION OF COUNTERS AND HEIGHTS OF BACKS SHALL BE VERIFIED BY THE CONTRACTOR BEFORE ROUGH-IN

UNFINISHED SPACE
42" ABOVE FINISHED FLOOR EXCEPT WHERE INTERFERENCE WITH MECHANICAL EQUIPMENT REQUIRES HIGHER MOUNTING

EXTERIOR - WALL
24" ABOVE FINISHED FLOOR. IF RECEPTACLE IS LESS THAN 24" ABOVE FINISHED GRADE, INCREASE MOUNTING HEIGHT TO MAINTAIN 24" ABOVE FINISHED GRADE

ROOF - WALL
24" ABOVE FINISHED FLOOR

RECEPTACLE - SPECIAL PURPOSE
SAME AS RECEPTACLES

SWITCH - LIGHTING
42" ABOVE FLOOR ON STRIKE SIDE OF DOOR. WHERE SWITCHES OCCUR IN BRICK, TILE, OR BLOCK WALLS, THEY SHALL BE MOUNTED AT VERTICAL MASONRY JOINT AND IN EITHER TOP OR BOTTOM HORIZONTAL JOINT, WHICHEVER IS CLOSEST TO THE MOUNTING HEIGHT. WHERE SWITCH HEIGHT OCCURS AT POINT OF CHANGE OF FINISH, THEY SHALL BE RAISED OR LOWERED TO OCCUR IN ONE FINISH

TELEVISION RECEPTACLE - WALL
7'-0" ABOVE FINISHED FLOOR OR SAME HEIGHT AS TELEVISION OUTLET

FIRE ALARM

AUDIBLE - WALL
6" BELOW CEILING OR 80" ABOVE FINISHED FLOOR, WHICHEVER IS LOWER

CONTROL PANEL - WALL
TOP OF TRIM 6'-0" ABOVE FINISHED FLOOR. IF CABINET IS OVER 6'-0" TALL, MOUNT BOTTOM EDGE 6" ABOVE FINISHED FLOOR

PULL STATION
42" ABOVE FINISHED FLOOR

REMOTE ANNUNCIATOR STATION
5'-0" ABOVE FINISHED FLOOR

REMOTE DUCT DETECTOR TEST STATION - WALL
5'-0" ABOVE FINISHED FLOOR

VISUAL - WALL
6" BELOW CEILING OR 80" ABOVE FINISHED FLOOR, WHICHEVER IS LOWER

VISUAL / AUDIBLE (COMBINATION TYPE) - WALL
6" (CENTER OF VISUAL) BELOW CEILING OR 80" ABOVE FINISHED FLOOR, WHICHEVER IS LOWER

DISTRIBUTION EQUIPMENT

BLANK OUTLET - WALL
SAME AS RECEPTACLES

CABINET (EQUIPMENT) - WALL
TOP OF TRIM 6'-0" ABOVE FINISHED FLOOR. IF CABINET IS OVER 6'-0" TALL, MOUNT BOTTOM EDGE 6" ABOVE FINISHED FLOOR

CIRCUIT BREAKER - ENCLOSED
5'-0" ABOVE FINISHED FLOOR

CONTACTOR
5'-0" ABOVE FINISHED FLOOR

DISCONNECT SWITCH
5'-0" ABOVE FINISHED FLOOR

GENERATOR REMOTE ANNUNCIATOR STATION
5'-0" ABOVE FINISHED FLOOR

PANELBOARD / TRANSFER SWITCH
TOP OF TRIM 6'-0" ABOVE FINISHED FLOOR. IF PANELBOARD IS OVER 6'-0" TALL, MOUNT BOTTOM EDGE OF PANELBOARD 6" ABOVE FINISHED FLOOR

SURFACE RACEWAY - HORIZONTAL RUN
SAME AS RECEPTACLES

THERMAL SWITCH - WALL
SAME AS LIGHT SWITCHES

TELECOMMUNICATION / NETWORK

AREA OF RESCUE ASSISTANCE SIGN
6" BELOW CEILING OR 80" ABOVE FINISHED FLOOR, WHICHEVER IS LOWER

AREA OF RESCUE ASSISTANCE INTERCOM MASTER STATION
42" ABOVE FINISHED FLOOR

AREA OF RESCUE ASSISTANCE INTERCOM STATION
42" ABOVE FINISHED FLOOR

BELL
80" ABOVE FINISHED FLOOR

DATA / VOICE OUTLET - WALL
SAME AS RECEPTACLES

HORNS - OUTDOOR
12" BELOW EDGE OR ROOM

TELEPHONE OUTLET - WALL
LOW: SAME AS RECEPTACLES
HIGH: 48" ABOVE FINISHED FLOOR

SECURITY / ACCESS CONTROL / SURVEILLANCE

AUDIBLE (BUZZER) - WALL
6" BELOW CEILING OR 80" ABOVE FINISHED FLOOR, WHICHEVER IS LOWER

BIOMETRIC READER
48" ABOVE FINISHED FLOOR

CAMERA - WALL
7'-6" ABOVE FINISHED FLOOR

CARD / PROXIMITY READ
48" ABOVE FINISHED FLOOR

HORNS - OUTDOOR
12" BELOW EDGE OR ROOF

INTERCOM STATION
48" ABOVE FINISHED FLOOR

MONITOR - WALL
7'-6" ABOVE FINISHED FLOOR

PUSHBUTTON - WALL
SAME AS LIGHTING SWITCH

OCCUPANCY SENSOR - WALL
8'-0" ABOVE FINISHED FLOOR OR AS RECOMMENDED BY MANUFACTURER

SPEAKER - WALL
7'-6" ABOVE FINISHED FLOOR

VISUAL (STROBE) - WALL
6" BELOW CEILING OR 80" ABOVE FINISHED FLOOR, WHICHEVER IS LOWER

MOUNTING HEIGHT NOTES:

1. UNLESS INDICATED OTHERWISE ON THE PLANS OR AS DIRECTED BY THE ENGINEER, CENTERLINE OF DEVICE SHALL BE AS INDICATED ABOVE.
2. WHERE MOUNTING HEIGHTS ARE NOT DETAILED OR DIMENSIONED, THE CONTRACTOR SHALL INSTALL SYSTEMS, MATERIALS, AND EQUIPMENT TO PROVIDE THE MAXIMUM HEADROOM POSSIBLE AND COMPLY WITH THE REQUIREMENTS OF THE EQUIPMENT MANUFACTURER. WHERE EQUIPMENT IS INTENDED, SPECIFIED, OR NOTED TO BE MOUNTED OTHER THAN INDICATED ABOVE, MOUNT IN ACCORDANCE WITH THE MANUFACTURER'S RECOMMENDATIONS AND AS DIRECTED.
3. WHERE MULTIPLE DEVICES ARE INSTALLED WITHIN CLOSE PROXIMITY TO EACH OTHER, THEY SHALL BE INSTALLED AT SAME HEIGHT.
4. NOT ALL EQUIPMENT INDICATED WITH MOUNTING HEIGHTS ARE ON THESE CONTRACT DOCUMENTS.

BUCHART HORN
ENGINEERS • ARCHITECTS • PLANNERS

MEPF
Buchart Horn Architects
445 West Philadelphia Street
York, PA 17401
717.852.1400

READING FIRE DEPARTMENT ENGINE 3, 3 rd & COURT
GENERATOR / BOILER REPLACEMENT
15 N 14 th STREET
READING, PA

DEPARTMENT OF PUBLIC WORKS, CITY OF READING, PENNSYLVANIA
815 WASHINGTON ST.
READING, PA

REVISIONS			
MARK	ISSUED DATE	DESCRIPTION	

PROJECT NO:	81083-01
ISSUED DATE:	06/05/20
DRAWN BY:	WCA
CHECKED BY:	JJG

© BUCHART HORN, INC.

SHEET TITLE:

ELECTRICAL ABBREVIATIONS AND GENERAL INFORMATION

SHEET NO:

E-002

GENERAL NOTES

1. SEE ONE LINE DIAGRAM ON SHEET E-601 FOR SERVICE INFORMATION.
2. SEE DUCT BANK AND GROUNDING DETAILS ON SHEET E-501.

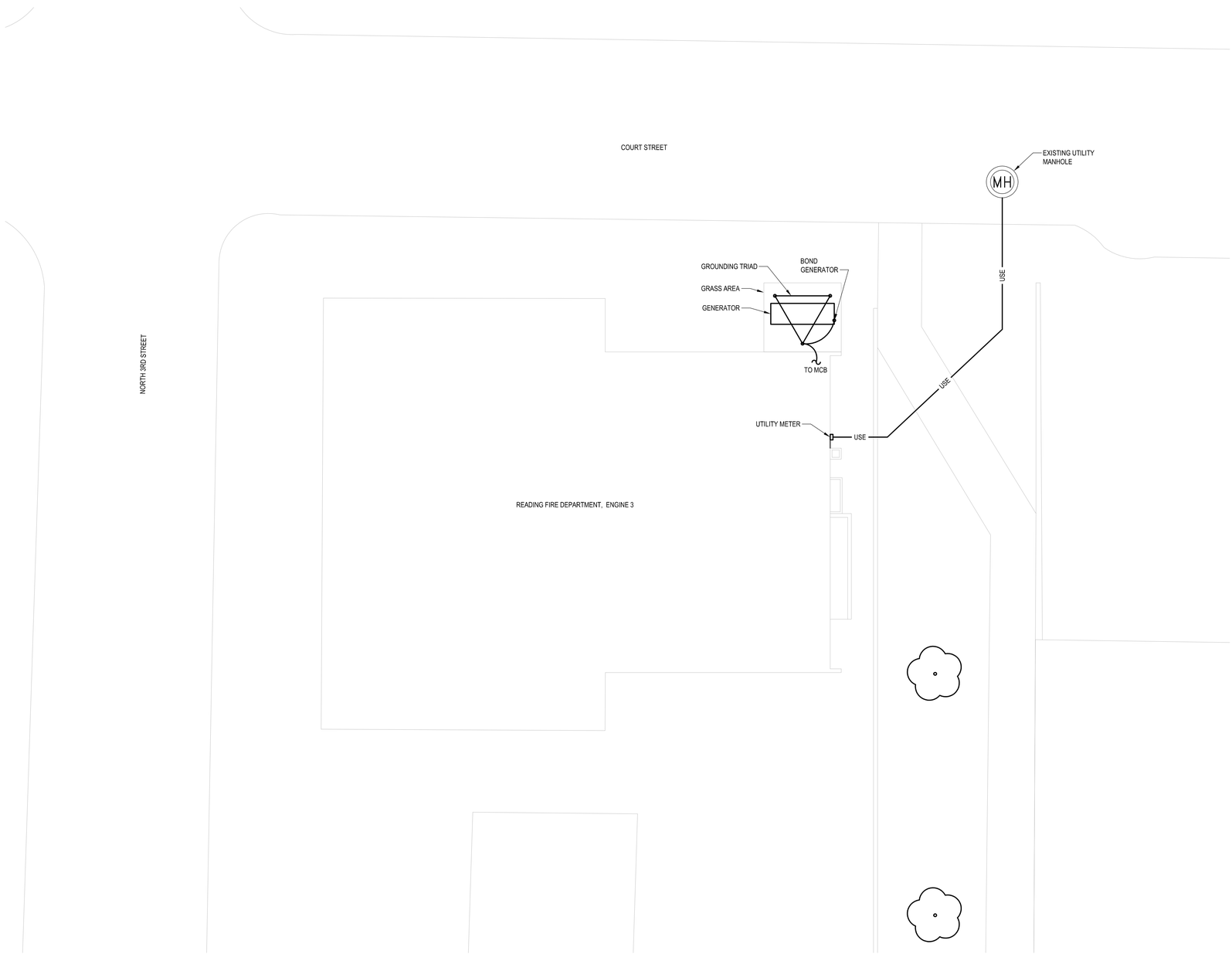

1 ELECTRICAL SITE PLAN

SCALE: 1" = 10'

0 10' 20'

N W E S PROJECT NORTH

PRELIMINARY - NOT FOR CONSTRUCTION

BUCHART HORN
ENGINEERS • ARCHITECTS • PLANNERS

MEP/F
Buchart Horn Architects
445 West Philadelphia Street
York, PA 17401
717.852.1400

READING FIRE DEPARTMENT ENGINE 3, 3 rd & COURT
GENERATOR / BOILER REPLACEMENT
15 N 3 rd STREET
READING, PA
DEPARTMENT OF PUBLIC WORKS, CITY OF READING, PENNSYLVANIA
815 WASHINGTON ST.
READING, PA

REVISIONS

MARK	ISSUED DATE	DESCRIPTION

PROJECT NO:	81083-01
ISSUED DATE:	06/05/20
DRAWN BY:	CLM
CHECKED BY:	JJG

© BUCHART HORN, INC.

SHEET TITLE:

ELECTRICAL SITE PLAN

SHEET NO:

E-003

GENERAL NOTES

1. SEE ONE LINE DIAGRAM ON SHEET E-601 FOR DEMOLITION STAGING INFORMATION.
2. ALL BRANCH CIRCUITS FROM PANELS AND SUB PANELS NOT MARKED FOR DEMOLITION ON SHEET 601 SHALL BE MADE SAFE FOR RECONNECTION IN NEW PANELS.
3. CONTRACTOR SHALL UTILIZE EXISTING PANEL BOARD CANS WHEREVER POSSIBLE TO FACILITATE QUICKER INSTALLATION OF NEW PANELS IN EXISTING LOCATIONS.
4. CONTRACTOR SHALL VISIT THE SITE TO CONFIRM EXISTING FEEDER ROUTES AND LENGTHS PRIOR TO ASSEMBLING BID OR COMPLETING WORK.

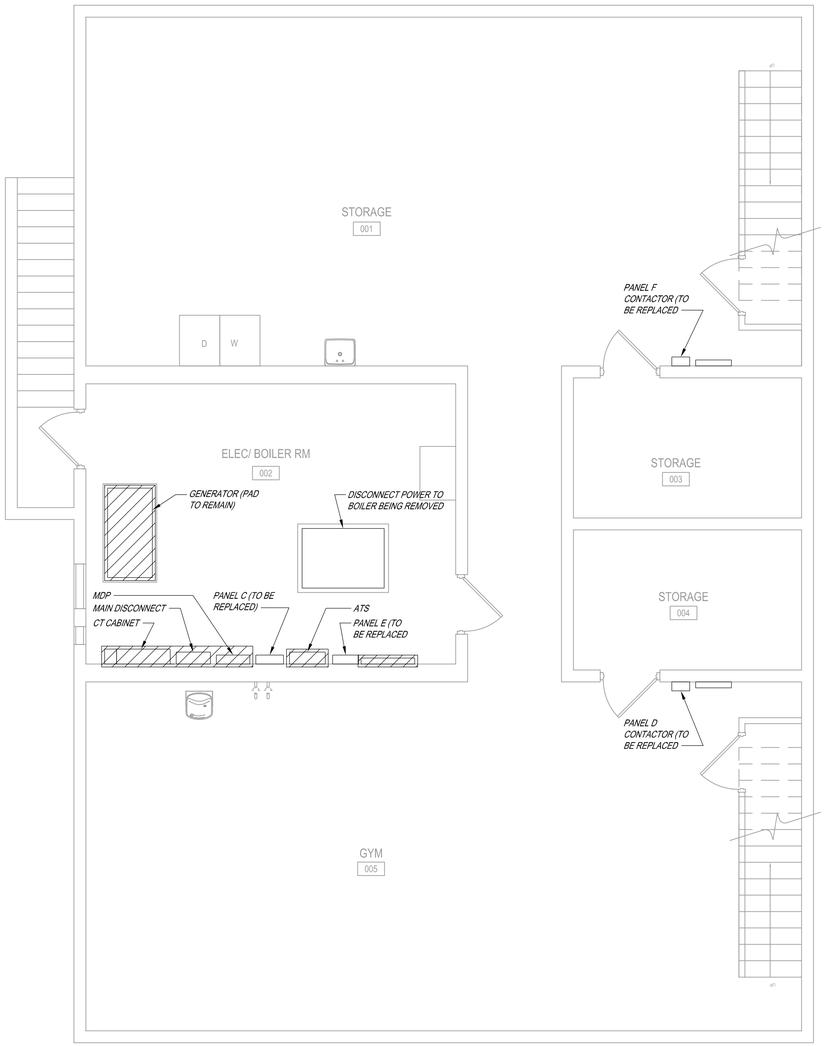

1 BASEMENT ELECTRICAL DEMOLITION PLAN

SCALE: 1/4" = 1'-0"

0 2' 4' 8'

PROJECT NORTH

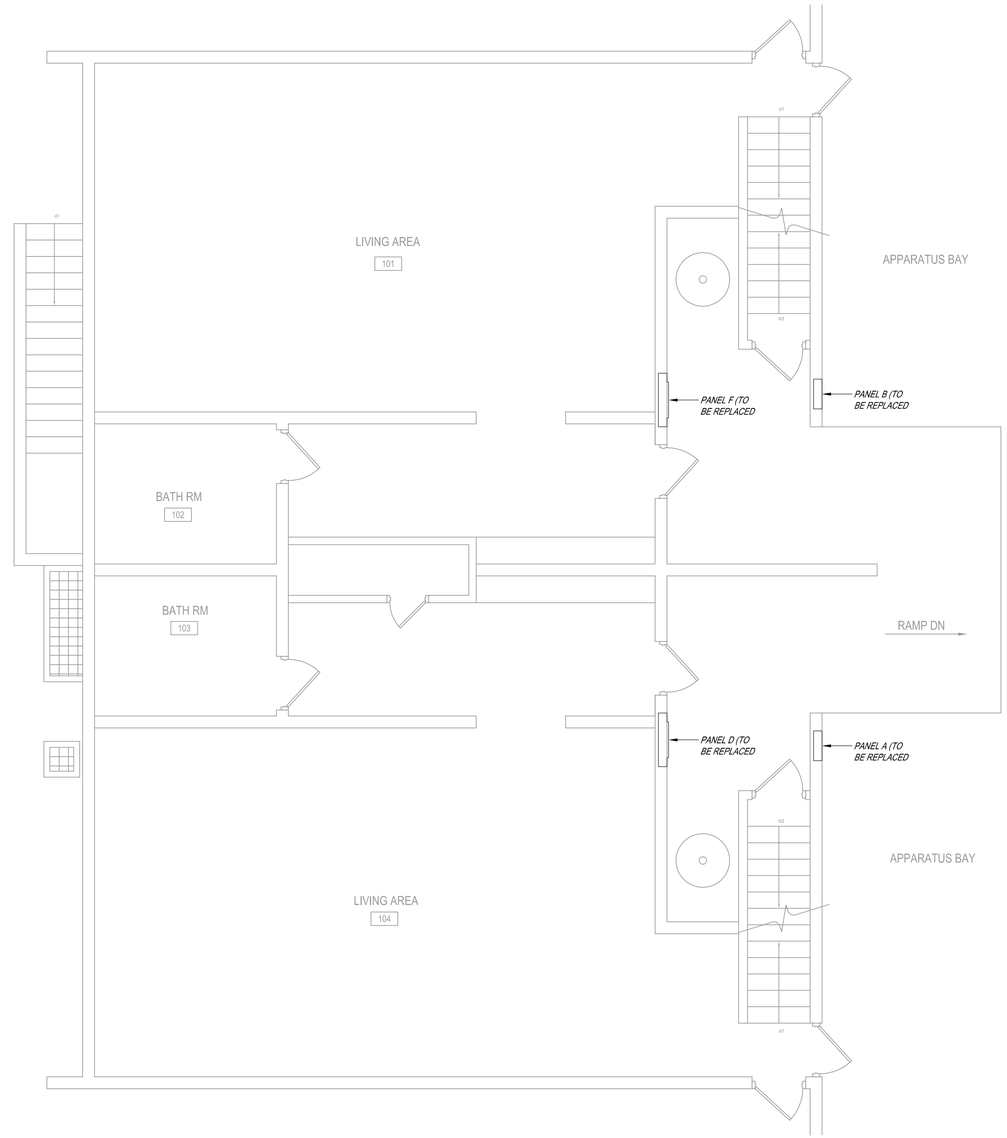

2 FIRST FLOOR ELECTRICAL DEMOLITION PLAN

SCALE: 1/4" = 1'-0"

0 2' 4' 8'

PROJECT NORTH

PRELIMINARY - NOT FOR CONSTRUCTION

BUCHART HORN
ENGINEERS • ARCHITECTS • PLANNERS

MEP/F
Buchart Horn Architects
445 W. Philadelphia Street
York, PA 17401
717.852.1400

READING FIRE DEPARTMENT ENGINE 3, 3 rd & COURT
GENERATOR / BOILER REPLACEMENT
1514 1st STREET
READING, PA
DEPARTMENT OF PUBLIC WORKS, CITY OF READING, PENNSYLVANIA
815 WASHINGTON ST.
READING, PA

REVISIONS

MARK	ISSUED DATE	DESCRIPTION

PROJECT NO:	81083-01
ISSUED DATE:	06/05/20
DRAWN BY:	CLM
CHECKED BY:	JJG

© BUCHART HORN, INC.

SHEET TITLE:

ELECTRICAL DEMOLITION PLANS

SHEET NO:

E-011

GENERAL NOTES

1. SEE ONE LINE DIAGRAM ON SHEET E-601.
2. SEE PANEL SCHEDULES ON SHEET E-602 AND E-603.
3. CONTRACTOR SHALL INSTALL NEW PANELS IN SAME LOCATION AS OLD WHEREVER POSSIBLE TO ENSURE THAT BRANCH CIRCUIT CONDUCTORS ARE OF ADEQUATE LENGTH TO RECONNECT TO BREAKERS IN NEW PANELS. EXTEND AS REQUIRED.
4. FOR PANELS A AND B, CONTRACTOR SHALL INSTALL SURFACE MOUNTED PANEL BOARDS NEXT TO EXISTING FLUSH MOUNTED PANEL BOARDS. UTILIZE EXISTING PANEL BOARDS AS A PULL/JUNCTION BOX AND EXTEND BRANCH CONDUCTORS INTO NEW PANELS.
5. SEE EXISTING PANEL D/F DETAIL ON SHEET E-501 FOR MORE INFORMATION ON HOW PANELS D AND F ARE CURRENTLY WIRED. NORMAL/FIRE ALARM CIRCUITS SHALL BE SEPARATED INTO SEPARATE PANELS SHOWN: PANELS D-N AND D-F AS WELL AS F-N AND F-F. SEPARATE PANELS SHALL BE INSTALLED WITHIN OR NEXT TO BOX SPACE OF EXISTING PANELS D AND F. PROVIDE SHEET METAL COVER PLATES TO COVER ANY OPEN SPACES LEFT PAINT TO MARCH EXISTING WALL COLOR.

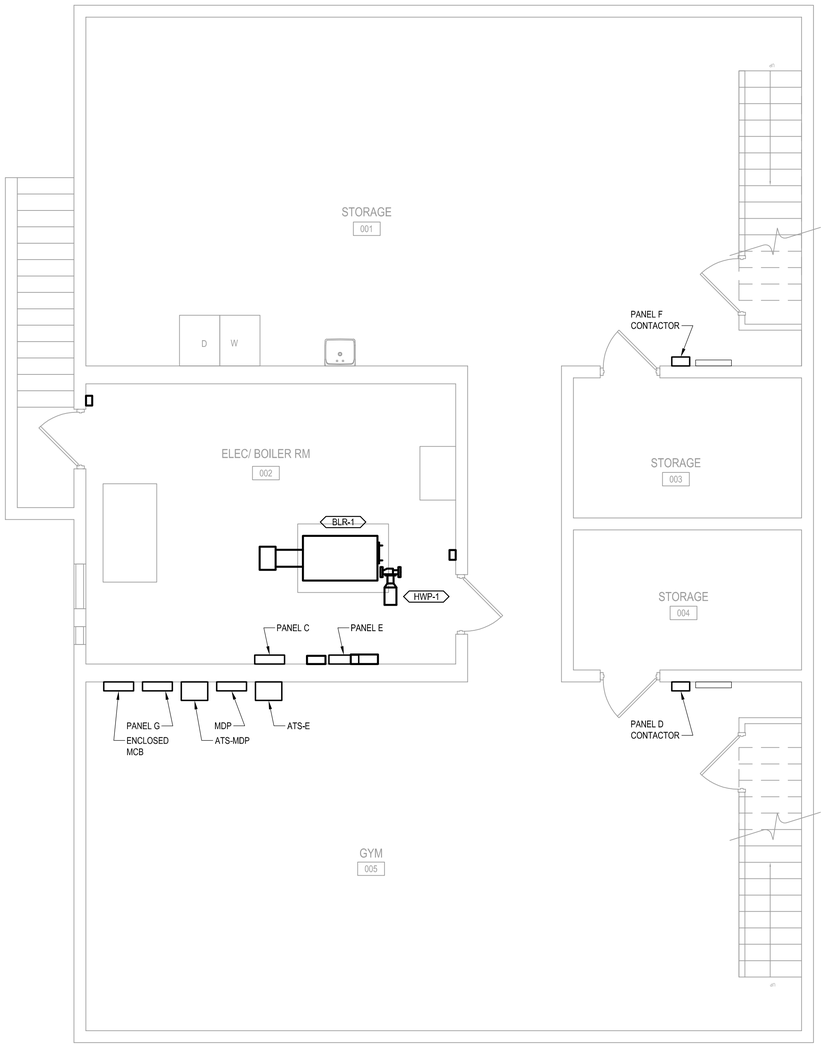

1 BASEMENT POWER PLAN
SCALE: 1/4" = 1'-0"
0 2' 4' 8'
PROJECT NORTH

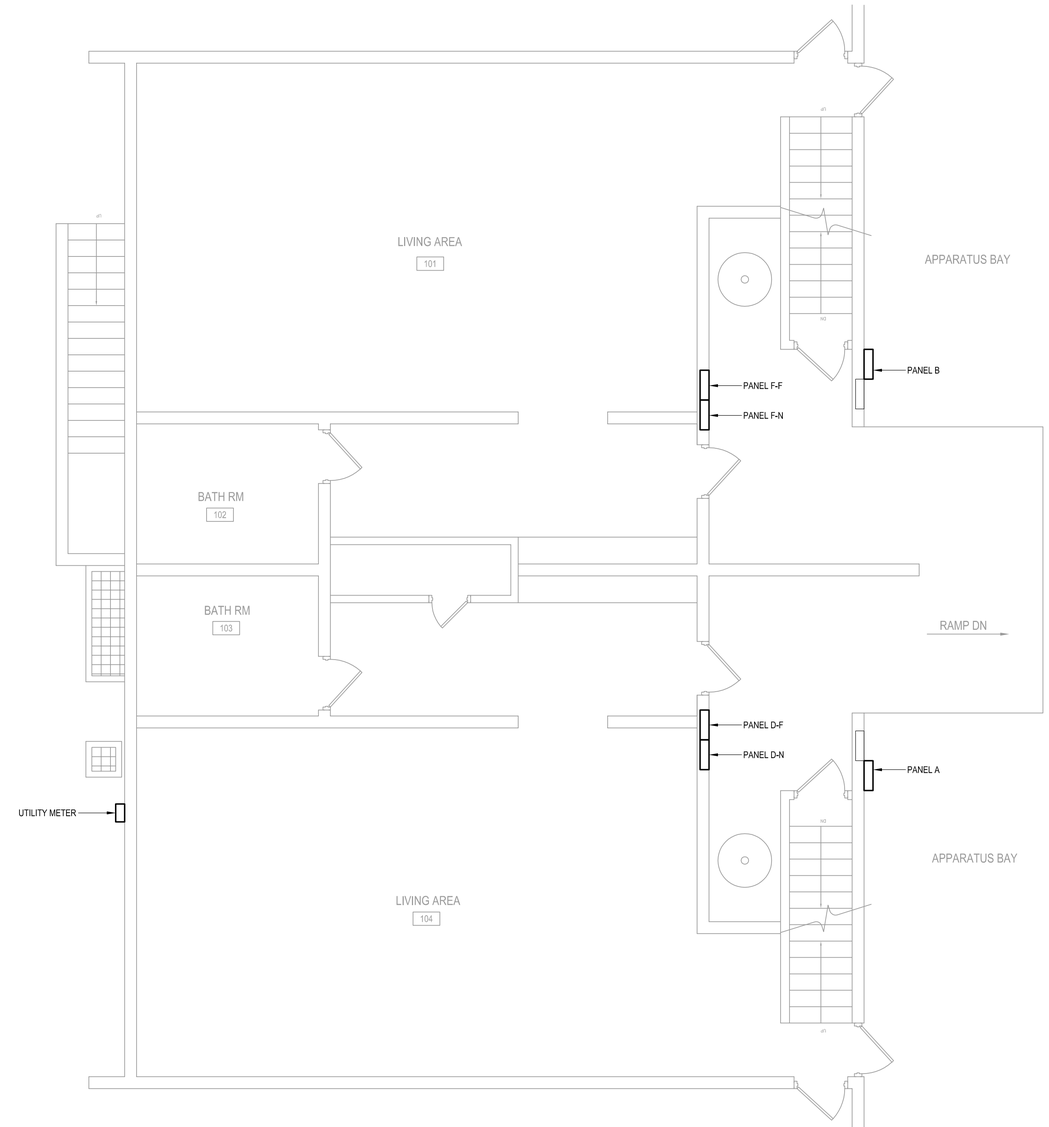

2 FIRST FLOOR POWER PLAN
SCALE: 1/4" = 1'-0"
0 2' 4' 8'
PROJECT NORTH

PRELIMINARY - NOT FOR CONSTRUCTION

BUCHART HORN
ENGINEERS • ARCHITECTS • PLANNERS

M E P F
Buchart Horn Architects
44 North Newberry Street
York, PA 17401
717.852.1400

READING FIRE DEPARTMENT ENGINE 3, 3 rd & COURT
GENERATOR / BOILER REPLACEMENT
15 N 3 rd STREET
READING, PA
DEPARTMENT OF PUBLIC WORKS, CITY OF READING, PENNSYLVANIA
815 WASHINGTON ST.
READING, PA

REVISIONS

MARK	ISSUED DATE	DESCRIPTION

PROJECT NO:	81083-01
ISSUED DATE:	06/05/20
DRAWN BY:	CLM
CHECKED BY:	JJG

© BUCHART HORN, INC.

SHEET TITLE:
FLOOR PLANS - POWER

SHEET NO:
E-101

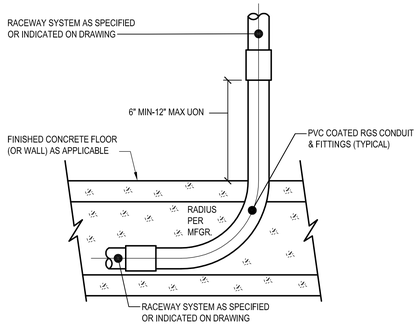

1 TYPICAL CONDUIT PENETRATION OF CONCRETE FLOOR DETAIL

NOT TO SCALE

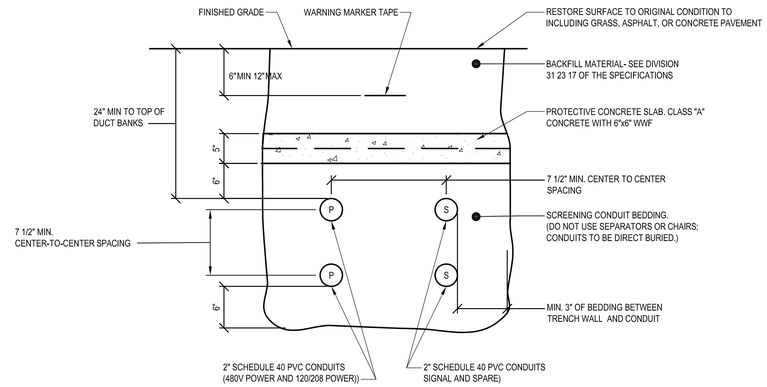

2 DIRECT BURIAL DUCTBANK DETAILS

NOT TO SCALE

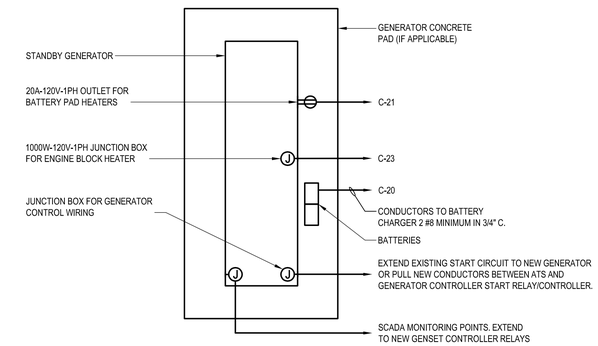

3 GENERATOR ACCESSORIES CONNECTION DETAIL

NOT TO SCALE

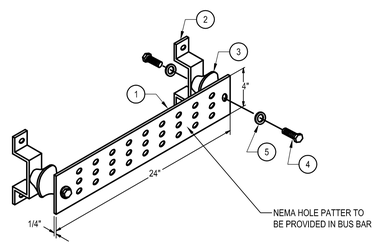

GROUND BAR KEYED NOTES: #

1. SOLID COPPER GROUND BAR 1/4"x4"x24
2. WALL MOUNTING BRACKET
3. INSULATORS
4. 5/8" - 1 1x1 HHCS BOLTS
5. 5/8" LOCKWASHER

4 TYPICAL GROUND BAR DETAIL

NOT TO SCALE

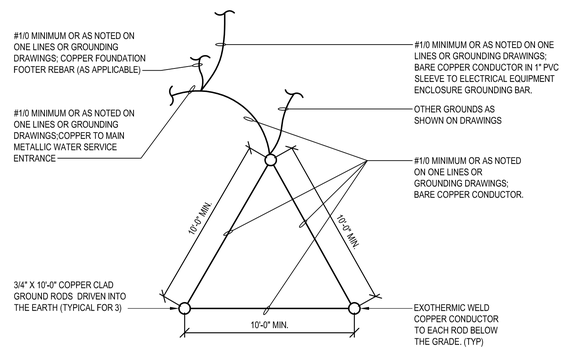

6 GROUNDING TRIAD DETAIL

NOT TO SCALE

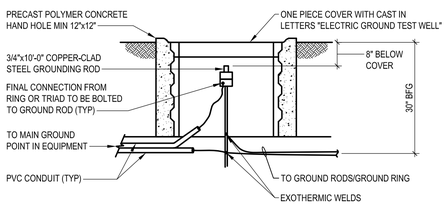

5 TYPICAL GROUND TEST WELL DETAIL

NOT TO SCALE

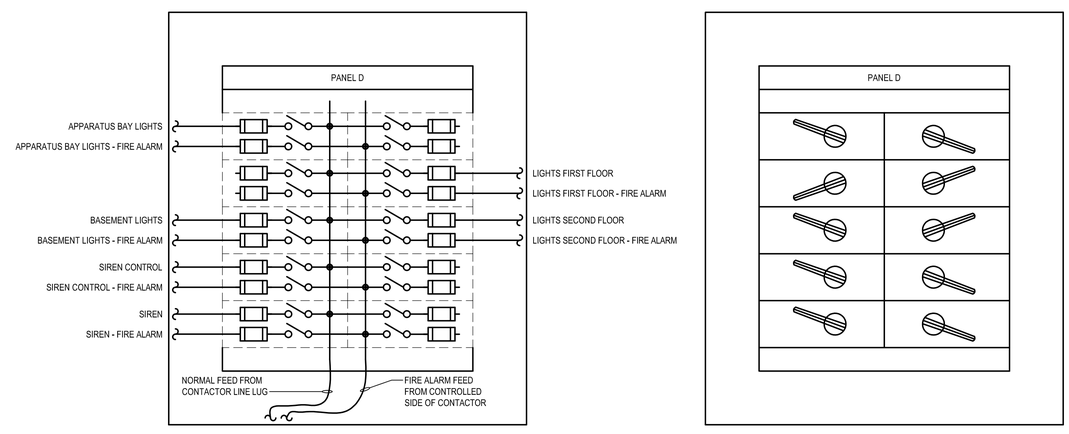

7 EXISTING PANEL D WIRING DIAGRAM (PANEL E IS SIMILAR)

NOT TO SCALE

PRELIMINARY - NOT FOR CONSTRUCTION

BUCHART HORN
ENGINEERS • ARCHITECTS • PLANNERS

MEP/F
Buchart Horn Architects
445 West Philadelphia Street
York, PA 17401
717.852.1400

READING FIRE DEPARTMENT ENGINE 3, 3 rd & COURT
GENERATOR / BOILER REPLACEMENT
15 N 3rd STREET
READING, PA.
DEPARTMENT OF PUBLIC WORKS, CITY OF READING, PENNSYLVANIA
815 WASHINGTON ST.
READING, PA.

REVISIONS		
MARK	ISSUED DATE	DESCRIPTION

PROJECT NO:	81083-01
ISSUED DATE:	06/05/20
DRAWN BY:	WCA
CHECKED BY:	JJG

© BUCHART HORN, INC.

SHEET TITLE:

ELECTRICAL DETAILS

SHEET NO:

E-501

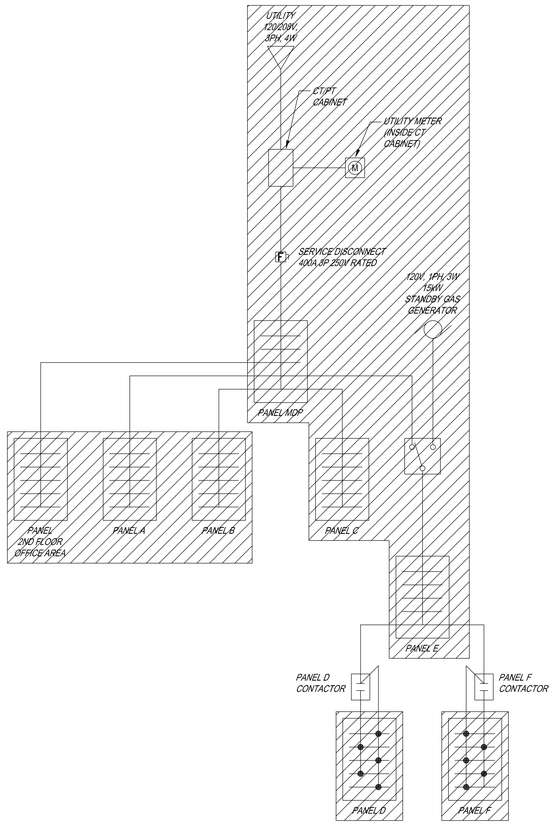

1 EXISTING ONE-LINE DIAGRAM

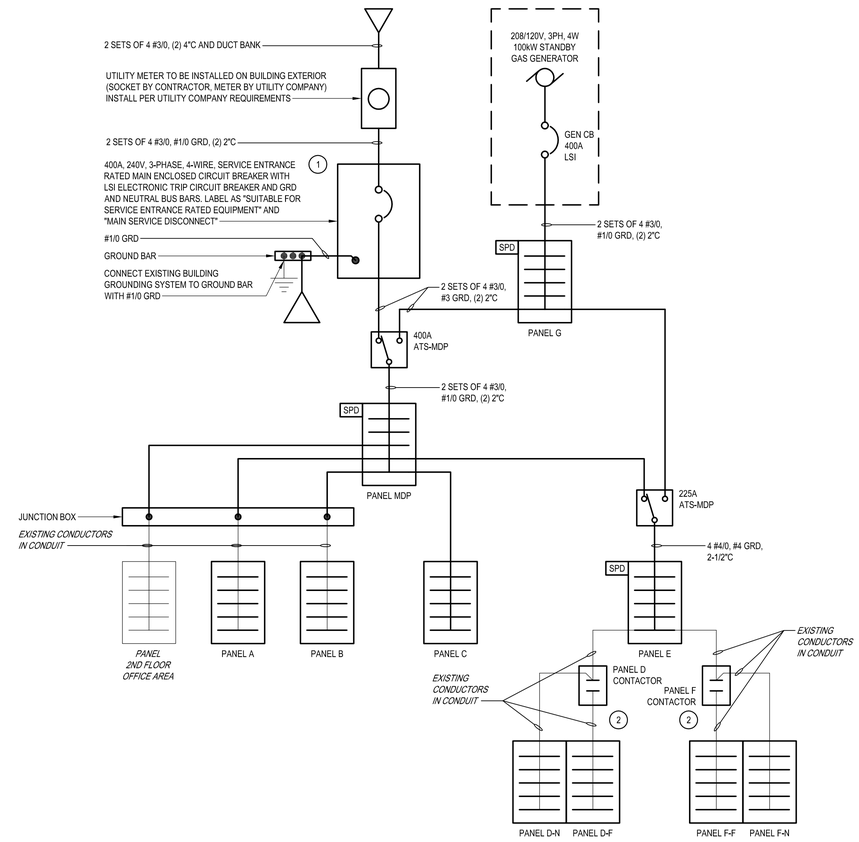

2 PROPOSED ONE-LINE DIAGRAM

GENERAL NOTES

1. SEE SHEET E-003 FOR UTILITY SERVICE LOCATION.
2. SEE SHEET E-011 FOR EXISTING ELECTRICAL EQUIPMENT LOCATIONS AND DEMOLITION PLAN.
3. SEE SHEET E-101 FOR NEW ELECTRICAL EQUIPMENT LOCATIONS.
4. SEE SUGGESTED ELECTRICAL CONSTRUCTION STAGING INFORMATION ON THIS SHEET FOR INFORMATION ON STAGING TO ACHIEVE AS SHORT POWER OUTAGES AS POSSIBLE DURING CONSTRUCTION. CONTRACTOR SHALL CONFIRM AND SUBMIT STAGING PROPOSAL TO OWNER AND ENGINEER FOR APPROVAL PRIOR TO COMMENCING WORK.

KEY NOTES

1. BOND GROUND AND NEUTRAL BUS BARS WITHIN ENCLOSED BREAKER FOR SYSTEM BONDING JUMPER.
2. RECONNECT EXISTING CONTROL CIRCUIT FOR NEW CONTACTOR CONTROL.

ELECTRICAL CONSTRUCTION STAGING

1. CONTRACTOR SHALL INSTALL NEW SERVICE DUCT BANK, METER, EXTERIOR GENERATOR, TRANSFER SWITCHES, MAIN ENCLOSED CIRCUIT BREAKER AND MAIN DISTRIBUTION PANEL MDP WHILE FACILITY IS STILL RUNNING ON EXISTING SERVICE.
2. CONTRACTOR SHALL INSTALL JUNCTION BOX IN PROXIMITY TO PANEL MDP AND PULL NEW CONDUCTORS TO JUNCTION BOX TO BE PREPARED TO FEED EXISTING PANEL A, EXISTING PANEL B, AND THE EXISTING 2ND FLOOR PANEL. ALSO PULL NEW CONDUCTORS TO BE PREPARED TO FEED EXISTING PANEL C AND EXISTING PANEL E.
3. ONCE UTILITY HAS APPROVED INSTALLATION, CUT OVER POWER TO NEW SERVICE EQUIPMENT AS WELL AS POWER TO EXISTING DOWNSTREAM PANELS.
4. AT THIS POINT, ALL DOWNSTREAM PANELS CAN BE REPLACED ONE BY ONE IN ORDER OF OWNER PREFERENCE. COORDINATE ORDER IN THE FIELD.

PRELIMINARY - NOT FOR CONSTRUCTION

BUCHART HORN
ENGINEERS • ARCHITECTS • PLANNERS

MEP/F
Buchart Horn Architects
445 W. Philadelphia Street
York, PA 17401
717.852.1400

READING FIRE DEPARTMENT ENGINE 3, 3 rd & COURT
GENERATOR / BOILER REPLACEMENT
15 N 14th STREET
READING, PA

DEPARTMENT OF PUBLIC WORKS, CITY OF READING, PENNSYLVANIA
815 WASHINGTON ST.
READING, PA

REVISIONS		
MARK	ISSUED DATE	DESCRIPTION

PROJECT NO:	81083-01
ISSUED DATE:	06/05/20
DRAWN BY:	WCA/CLM
CHECKED BY:	JJG

© BUCHART HORN, INC.

SHEET TITLE:

ONE LINE DIAGRAM

SHEET NO:
E-601

DISTRIBUTION PANEL SCHEDULE

PANEL DESIGNATION: **MDP**
LOCATION: BASEMENT
MOUNTING: SURFACE
ENCLOSURE: NEMA 1

BUS AMPS: 400
PHASE: 3
FED FROM: ATS
LOCATION: BASEMENT

MIN. A.I.C.: X KA
WIRE: 4

MAIN BREAKER: 400A
VOLTAGE: 208Y/120
NEUTRAL SIZE: 100%
TOTAL INCHES: 63.0

NOTES:

CKT NO.	FEEDER/BRANCH CIRCUIT DESCRIPTION AREA	CIRC. NOTES	BREAKER FRAME	BREAKER AMP	BREAKER POLES	BREAKER INCH	LOAD (KVA) A	LOAD (KVA) B	LOAD (KVA) C	SETS NO.	WIRE NO.	WIRE SIZE	GND. SIZE	COND SIZE
1	HOSE DRYER - NEVERSINK	1	60	50	2	3.0	0.0			1	3	6	10	1
2	--							0.0						
3	POWER RECEPT - NEVERSINK	1	60	50	2	3.0			0.0	1	3	6	10	1
4	--						0.0							
5	SPARE		60	50	2	3.0		0.0						
6	--								0.0					
7	PANEL A		100	100	3	4.5	1.5			1	4	1	8	2
8	--							1.5						
9	--								1.5					
10	PANEL C		100	100	3	4.5	0.3			1	4	1	8	2
11	--							0.3						
12	--								0.3					
13	FUTURE AIR CONDITIONING		60	45	3	4.5	0.0			1	4	6	10	1
14	--							0.0						
15	--								0.0					
16	SPARE		60	50	3	4.5	0.0							
17	--							0.0						
18	--								0.0					
19	SPARE		100	100	3	4.5	0.0							
20	--							0.0						
21	--								0.0					
	SIDE CONNECTED KVA						2	2	2					

COND SIZE	GND. SIZE	WIRE SIZE	WIRE NO.	SETS NO.	LOAD (KVA) A	LOAD (KVA) B	LOAD (KVA) C	BREAKER INCH	BREAKER POLES	BREAKER AMP	BREAKER FRAME	CIRC. NOTES	FEEDER/BRANCH CIRCUIT DESCRIPTION AREA	CKT NO.
1	10	6	3	1	0.0			3.0	2	50	60	1	HOSE DRYER - KEYSTONE	22
						0.0							--	23
1	10	6	3	1			0.0	3.0	2	50	60	1	POWER RECEPT - KEYSTONE	24
					0.0								--	25
1	10	6	3	1		0.0		3.0	2	50	60	1	PANEL - 2ND FLOOR OFFICE AREA	26
							0.0						--	27
2	8	1	4	1	1.5			4.5	3	100	100		PANEL B	28
						1.5							--	29
							1.5						--	30
2-1/2	4	4/0	4	1	0.0			4.5	3	225	225		PANEL E	31
						0.0							--	32
							0.0						--	33
3/4	10	10	4	1	0.1			4.5	3	30	30		FUTURE AIR CONDITIONING	34
						0.1							--	35
							0.1						--	36
					0.0			4.5	3	100	100		SPARE	37
						0.0							--	38
							0.0						--	39
3/4	10	10	4	1	0.0			4.5	3	30	30		SPD	40
						0.0							--	41
							0.0						--	42
					2	2	2						SIDE CONNECTED KVA	

1 EXISTING CIRCUITS THAT WERE REFED

PANEL CONNECTED KVA: 10
PANEL DEMAND KVA: 10
PANEL DEMAND FACTOR: 100%

DERATING FACTOR (80%)
DEMAND LOAD SIZE: 35 *AMPS*

LIGHTING AND APPLIANCE PANEL SCHEDULE

PANEL DESIGNATION: **PANEL A**
LOCATION: NVRSNK APP BAY
MOUNTING: SURFACE
ENCLOSURE: NEMA 1

BUS AMPS: 400
PHASE: 3
FED FROM: MDP
LOCATION: BASEMENT

MIN. A.I.C.: X KA
WIRE: 4

MAIN BREAKER: 100A
VOLTAGE: 208Y/120
NEUTRAL SIZE: 100%
TOTAL POLES: 30

NOTES:

CKT NO.	FEEDER/BRANCH CIRCUIT DESCRIPTION AREA	CIRC. NOTES	BREAKER AMP	BREAKER POLES	LOAD (KVA) A	LOAD (KVA) B	LOAD (KVA) C	WIRE NO.	WIRE SIZE	GND. SIZE	COND SIZE
1	SPARE		20	1	0.0						
3	ENTRANCE & STAIR LIGHTS	1	20	1		0.0		2	12	12	3/4
5	EXHAUST FAN 1ST HOSE DRYER	1	20	1			0.0	2	12	12	3/4
7	BOILER ROOM LIGHTS	1	20	1	0.0			2	12	12	3/4
9	LOCKER ROOM & 2ND FLOOR TOILET LI	1	20	1		0.0		2	12	12	3/4
11	LOUNGE RECEPTS	1	20	1			0.9	2	12	12	3/4
13	APPARATUS ROOM RECEPTS	1	20	1	0.9			2	12	12	3/4
15	OFFICE & PASSAGE (1ST FLOOR) RECPT	1	20	1		0.9		2	12	12	3/4
17	FRONT OUTSIDE LIGHT	1	20	1			0.0	2	12	12	3/4
19	EXHAUST SYSTEM	1	20	1	0.0			2	12	12	3/4
21	EXHAUST SYSTEM	1	20	1		0.0		2	12	12	3/4
23	EXHAUST SYSTEM	1	20	1			0.0	2	12	12	3/4
25	SPARE	1	20		0						
27	SPARE	1	20			0					
29	SPARE	1	20				0				
	SIDE CONNECTED KVA				1	1	1				

COND SIZE	GND. SIZE	WIRE SIZE	WIRE NO.	LOAD (KVA) A	LOAD (KVA) B	LOAD (KVA) C	BREAKER POLES	BREAKER AMP	CIRC. NOTES	FEEDER/BRANCH CIRCUIT DESCRIPTION AREA	CKT NO.
3/4	12	12	2	0.0			1	20	1	LOUNGE LIGHTS	2
3/4	12	12	2		0.0		1	20	1	OFFICE, PASSAGE, TOILET LIGHTS	4
3/4	12	12	2			0.0	1	20	1	UTILITY & HOSE ROOM LIGHTS	6
3/4	12	12	2	0.0			1	20	1	DORMITORY LIGHTS	8
3/4	12	12	2		0.9		1	20	1	DORMITORY RECEPTS	10
3/4	12	12	2			0.0	1	20	1	EXHAUST FAN IN UTILITY ROOM	12
3/4	12	12	2	0.9			1	20	1	UTILITY ROOM RECPTS	14
3/4	12	12	2		0.0		1	20	1	DRINKING FOUNTAINS	16
3/4	12	12	2			0.0	1	20		????	18
3/4	12	12	2	0.0			1	20	1	AIR COMPRESSOR	20
3/4	12	12	3		0.0		2	20		????	22
						0.0				--	24
				0.0			1	20		SPARE	26
					0.0		1	20		SPARE	28
						0.0	1	20		SPARE	30
				1	1	0				SIDE CONNECTED KVA	

1 EXISTING CIRCUITS THAT WERE REFED

PANEL CONNECTED KVA: 5
PANEL DEMAND KVA: 5
PANEL DEMAND FACTOR: 100%

DERATING FACTOR (80%)
DEMAND LOAD SIZE: 16 *AMPS*

LIGHTING AND APPLIANCE PANEL SCHEDULE

PANEL DESIGNATION: **PANEL C**
LOCATION: BOILER ROOM
MOUNTING: SURFACE
ENCLOSURE: NEMA 1

BUS AMPS: 400
PHASE: 3
FED FROM: MDP
LOCATION: BASEMENT

MIN. A.I.C.: X KA
WIRE: 4

MAIN BREAKER: 100A
VOLTAGE: 208Y/120
NEUTRAL SIZE: 100%
TOTAL POLES: 30

NOTES:

CKT NO.	FEEDER/BRANCH CIRCUIT DESCRIPTION AREA	CIRC. NOTES	BREAKER AMP	BREAKER POLES	LOAD (KVA) A	LOAD (KVA) B	LOAD (KVA) C	WIRE NO.	WIRE SIZE	GND. SIZE	COND SIZE
1	????????????\	1	20	1	0.0			2	12	12	3/4
3	HEATING VALVES - KEYSTONE	1	20	1		0.0		2	12	12	3/4
5	UNIT HEATER - NEVERSINK	1	20	1			0.0	2	12	12	3/4
7	BATTERY CHARGER	1	20	1	0.0			2	12	12	3/4
9	OIL BURNER	1	20	1		0.0		2	12	12	3/4
11	NEVIES A/C	1	15	2			0.0	3	12	12	3/4
13	--				0.0						
15	IN USE	1	20	1		0.0		2	12	12	3/4
17	IN USE	1	20	1			0.0	2	12	12	3/4
19	IN USE	1	20	1	0.0			2	12	12	3/4
21	**RECPT FOR BATTERY PAD HTRS**		**20**	**1**		0.0		2	12	12	3/4
23	**ENGINE BLOCK HTR JB**		**20**	**1**			1.0	2	12	12	3/4
25	SPARE		20	1	0.0						
27	SPARE		20	1		0.0					
29	SPARE		20	1			0.0				
	SIDE CONNECTED KVA				0	0	1				

COND SIZE	GND. SIZE	WIRE SIZE	WIRE NO.	LOAD (KVA) A	LOAD (KVA) B	LOAD (KVA) C	BREAKER POLES	BREAKER AMP	CIRC. NOTES	FEEDER/BRANCH CIRCUIT DESCRIPTION AREA	CKT NO.
3/4	12	12	2	0.0			1	20	1	HEATING VALVES - NEVERSINK	2
3/4	12	12	2		0.0		1	20	1	UNIT HEATER CIRCULATING PUMP	4
3/4	12	12	2			0.0	1	20	1	UNIT HEATER - KEYSTONE	6
3/4	12	12	2	0.0			1	20	1	IN USE	8
3/4	12	12	2		0.0		1	20	1	IN USE	10
3/4	12	12	2			0.0	1	20	1	IN USE	12
3/4	12	12	2	0.0			1	20	1	IN USE	14
3/4	12	12	3		0.0		2	15	1	IN USE	16
						0.0				--	18
3/4	12	12	2	0.0			**1**	**20**		**BATTERY CHARGER**	20
					0					PROV	22
						0				PROV	24
				0.0			1	20		SPARE	26
					0.0		1	20		SPARE	28
						0.0	1	20		SPARE	30
				0	0	0				SIDE CONNECTED KVA	

1 EXISTING CIRCUITS THAT WERE REFED

PANEL CONNECTED KVA: 1
PANEL DEMAND KVA: 1
PANEL DEMAND FACTOR: 100%

DERATING FACTOR (80%)
DEMAND LOAD SIZE: 3 *AMPS*

LIGHTING AND APPLIANCE PANEL SCHEDULE

PANEL DESIGNATION: **PANEL B**
LOCATION: KYSTN APP BAY
MOUNTING: SURFACE
ENCLOSURE: NEMA 1

BUS AMPS: 400
PHASE: 3
FED FROM: MDP
LOCATION: BASEMENT

MIN. A.I.C.: X KA
WIRE: 4

MAIN BREAKER: 100A
VOLTAGE: 208Y/120
NEUTRAL SIZE: 100%
TOTAL POLES: 30

NOTES:

CKT NO.	FEEDER/BRANCH CIRCUIT DESCRIPTION AREA	CIRC. NOTES	BREAKER AMP	BREAKER POLES	LOAD (KVA) A	LOAD (KVA) B	LOAD (KVA) C	WIRE NO.	WIRE SIZE	GND. SIZE	COND SIZE
1	APPARATUS ROOM LIGHTS	1	20	1	0.0			2	12	12	3/4
3	ENTRANCE & STAIR LIGHTS	1	20	1		0.0		2	12	12	3/4
5	EXHAUST FAN HOSE DRYER	1	20	1			0.0	2	12	12	3/4
7			20	1	0.0			2	12	12	3/4
9	LOCKER ROOM & TOILET ROOM 2ND FL	1	20	1		0.0		2	12	12	3/4
11	LOUNGE RECEPTS	1	20	1			0.9	2	12	12	3/4
13	APPARATUS ROOM RECEPTS	1	20	1	0.9			2	12	12	3/4
15	OFFICE & PASSAGE 1ST FLOOR RECEPT	1	20	1		0.9		2	12	12	3/4
17	FRONT OUTSIDE LIGHT	1	20	1			0.0	2	12	12	3/4
19			20	1	0.0			2	12	12	3/4
21	OVERHEAD MOTOR	1	20	1		0.0		2	12	12	3/4
23			20	1			0.0	2	12	12	3/4
25	SPARE		20	1	0.0						
27	SPARE		20	1		0.0					
29	SPARE		20	1			0.0				
	SIDE CONNECTED KVA				1	1	1				

COND SIZE	GND. SIZE	WIRE SIZE	WIRE NO.	LOAD (KVA) A	LOAD (KVA) B	LOAD (KVA) C	BREAKER POLES	BREAKER AMP	CIRC. NOTES	FEEDER/BRANCH CIRCUIT DESCRIPTION AREA	CKT NO.
3/4	12	12	2	0.0			1	20	1	LOUNGE LIGHTS	2
3/4	12	12	2		0.0		1	20	1	OFFICE, PASSAGE, TOILET LIGHTS	4
3/4	12	12	2			0.0	1	20	1	UTILITY & HOSE ROOM LIGHTS	6
3/4	12	12	2	0.0			1	20	1	DORMITORY LIGHTS	8
3/4	12	12	2		0.9		1	20	1	DORMITORY RECPTS	10
3/4	12	12	2			0.0	1	20	1	EXHAUST FAN IN UTILITY ROOM	12
3/4	12	12	2	0.9			1	20	1	UTILITY ROOM RECPTS	14
3/4	12	12	2		0.0		1	20	1	CLOCK	16
3/4	12	12	2			0.0	1	20			18
3/4	12	12	2	0.0			1	20			20
3/4	12	12	3		0.0		2	20			22
						0.0					24
				0.0			1	20		SPARE	26
					0.0		1	20		SPARE	28
						0.0	1	20		SPARE	30
				1	1	0				SIDE CONNECTED KVA	

1 EXISTING CIRCUITS THAT WERE REFED

PANEL CONNECTED KVA: 5
PANEL DEMAND KVA: 5
PANEL DEMAND FACTOR: 100%

DERATING FACTOR (80%)
DEMAND LOAD SIZE: 16 *AMPS*

PRELIMINARY - NOT FOR CONSTRUCTION

BUCHART HORN
ENGINEERS • ARCHITECTS • PLANNERS

M/E/P/F
Buchart Horn Architects
445 West Philadelphia Street
York, PA 17401
717.852.1400

READING FIRE DEPARTMENT ENGINE 3, 3 rd & COURT GENERATOR / BOILER REPLACEMENT

15 N 3 rd STREET
READING, PA

DEPARTMENT OF PUBLIC WORKS, CITY OF READING, PENNSYLVANIA
815 WASHINGTON ST.
READING, PA

REVISIONS		
MARK	ISSUED DATE	DESCRIPTION

PROJECT NO:	81083-01
ISSUED DATE:	06/05/20
DRAWN BY:	WCA
CHECKED BY:	JJG

© BUCHART HORN, INC.

SHEET TITLE:
PANEL SCHEDULES

SHEET NO:
E-602

LIGHTING AND APPLIANCE PANEL SCHEDULE

PANEL DESIGNATION: **PANEL E**
LOCATION: BOILER ROOM
MOUNTING: SURFACE
ENCLOSURE: NEMA 1

BUS AMPS: 225
PHASE: 1
FED FROM: MDP
LOCATION: BASEMENT

MIN. A.I.C.: X KA
WIRE: 3

MAIN BREAKER: 225A
VOLTAGE: 120/208
NEUTRAL SIZE: 100%
TOTAL POLES: 30

NOTES:

CKT NO.	FEEDER/BRANCH CIRCUIT DESCRIPTION	AREA	CIRC. NOTES	BREAKER AMP	BREAKER POLES	LOAD (KVA) A	LOAD (KVA) B		WIRE NO.	WIRE SIZE	GND. SIZE	COND. SIZE	COND. SIZE	GND. SIZE	WIRE SIZE	WIRE NO.	LOAD (KVA) A	LOAD (KVA) B		BREAKER POLES	BREAKER AMP	CIRC. NOTES	FEEDER/BRANCH CIRCUIT DESCRIPTION	AREA	CKT NO.
1	SPARE			20	1	0.0											0.0			1	20		SPARE		2
3	NEVERSINK FEED TO PANEL - D		1	20	1		0.0		2	12	12	3/4	3/4	12	12	2		0.0		1	20	1	KEYSTONE FEED TO PANEL - F		4
5	KEYSTONE CONTROL WIRE		1	20	1	0.0			2	12	12	3/4	3/4	12	12	3	0.0			2	20	1	NEVERSINK CONTROL WIRE		6
7	BOILER ROOM LIGHT		1	20	1		0.0		2	12	12	3/4						0.0					--		8
9	RADIO RECEPT		1	20	2	0.1			3	12	12	3/4	3/4	12	12	3	0.0			2	20	1	NEVERSINK 2ND FLOOR		10
11	--						0.1											0.0					--		12
13	KEYSTONE 1ST FLOOR		1	20	2	0.0			3	12	12	3/4	3/4	12	12	3	0.0			2	20	1	NEVERSINK 1ST FLOOR		14
15	--						0.0											0.0					--		16
17	KEYSTONE 2ND FLOOR		1	20	2	0.0			3	12	12	3/4					0.0			2	20		SPARE		18
19	--						0.0											0.0					--		20
21	SPARE (ON)			20	2	0.0			3	12	12	3/4	3/4	12	12	3	0.0			2	20		SPARE (ON)		22
23	--						0.0											0.0					--		24
25	PANEL D CONTACTOR			100	2	0.0			3	1	8	1-1/2	1-1/2	8	1	3	0.0			2	100		PANEL F CONTACTOR		26
27	--						0.0											0.0					--		28
29	SPARE			20	1	0.0											0.0			1	20		SPARE		30
						0	0					PANEL CONNECTED KVA	0				0	0	SIDE CONNECTED KVA						
	1 EXISTING CIRCUITS THAT WERE REFED											PANEL DEMAND KVA	0										*DERATING FACTOR (80%)*		
												PANEL DEMAND FACTOR	100%										*DEMAND LOAD SIZE:* 1 *4MPS*		

LIGHTING AND APPLIANCE PANEL SCHEDULE

PANEL DESIGNATION: **PANEL D-F**
LOCATION: NVRSNK APP BAY
MOUNTING: FLUSH
ENCLOSURE: NEMA 1

BUS AMPS: 225
PHASE: 1
FED FROM: PANEL E VIA CONTACTOR
LOCATION: BOILER ROOM

MIN. A.I.C.: X KA
WIRE: 3

MAIN BREAKER: 100A
VOLTAGE: 120/208
NEUTRAL SIZE: 100%
TOTAL POLES: 42

NOTES:

CKT NO.	FEEDER/BRANCH CIRCUIT DESCRIPTION	AREA	CIRC. NOTES	BREAKER AMP	BREAKER POLES	LOAD (KVA) A	LOAD (KVA) B		WIRE NO.	WIRE SIZE	GND. SIZE	COND. SIZE	COND. SIZE	GND. SIZE	WIRE SIZE	WIRE NO.	LOAD (KVA) A	LOAD (KVA) B		BREAKER POLES	BREAKER AMP	CIRC. NOTES	FEEDER/BRANCH CIRCUIT DESCRIPTION	AREA	CKT NO.
1	APPARATUS ROOM LIGHTS - FIRE ALARM			20	1	0.0			2	12	12	3/4	3/4	12	12	2	0.0			1	20		SPARE ON - FIRE ALARM		2
3	SPARE (ON) - FIRE ALARM			20	1		0.0		2	12	12	3/4	3/4	12	12	2		0.0		1	20		LIGHTS 1ST FLOOR - FIRE ALARM		4
5	BASEMENT LIGHTS - FIRE ALARM			20	1	0.0			2	12	12	3/4	3/4	12	12	2	0.0			1	20		LIGHTS 2ND FLOOR- FIRE ALARM		6
7	SIREN CONTROL WIRE - FIRE ALARM			20	1		0.0		2	12	12	3/4	3/4	12	12	2		0.0		1	20		SPARE - FIRE ALARM		8
9	SIREN - FIRE ALARM			20	1	0.0			2	12	12	3/4	3/4	12	12	2	0.0			1	20		SPARE - FIRE ALARM		10
11	SPARE - FIRE ALARM			20	1		0.0		2	12	12	3/4	3/4	12	12	2		0.0		1	20		SPARE - FIRE ALARM		12
13	PROVISIONAL					0											0						PROVISIONAL		14
15	PROVISIONAL						0											0					PROVISIONAL		16
17	PROVISIONAL					0											0						PROVISIONAL		18
					SIDE CONNECTED KVA	0	0					PANEL CONNECTED KVA	0				0	0	SIDE CONNECTED KVA						
												PANEL DEMAND KVA	0										*DERATING FACTOR (80%)*		
												PANEL DEMAND FACTOR	100%										*DEMAND LOAD SIZE:* 0 *4MPS*		

LIGHTING AND APPLIANCE PANEL SCHEDULE

PANEL DESIGNATION: **PANEL F - F**
LOCATION: KYSTN APP BAY
MOUNTING: FLUSH
ENCLOSURE: NEMA 1

BUS AMPS: 225
PHASE: 1
FED FROM: PANEL E VIA CONTRACTOR
LOCATION: BOILER ROOM

MIN. A.I.C.: X KA
WIRE: 3

MAIN BREAKER: 100A
VOLTAGE: 120/208
NEUTRAL SIZE: 100%
TOTAL POLES: 42

NOTES:

CKT NO.	FEEDER/BRANCH CIRCUIT DESCRIPTION	AREA	CIRC. NOTES	BREAKER AMP	BREAKER POLES	LOAD (KVA) A	LOAD (KVA) B		WIRE NO.	WIRE SIZE	GND. SIZE	COND. SIZE	COND. SIZE	GND. SIZE	WIRE SIZE	WIRE NO.	LOAD (KVA) A	LOAD (KVA) B		BREAKER POLES	BREAKER AMP	CIRC. NOTES	FEEDER/BRANCH CIRCUIT DESCRIPTION	AREA	CKT NO.
1	LOUNGE LIGHT - FIRE ALARM			20	1	0.0			2	12	12	3/4	3/4	12	12	2	0.0			1	20		SPARE (ON) - FIRE ALARM		2
3	APPARATUS ROOM LIGHTS - FIRE ALARM			20	1		0.0		2	12	12	3/4	3/4	12	12	2		0.0		1	20		LIGHTS 1ST FLOOR - FIRE ALARM		4
5	BASEMENT LIGHTS - FIRE ALARM			20	1	0.0			2	12	12	3/4	3/4	12	12	2	0.0			1	20		LIGHTS 2ND FLOOR - FIRE ALARM		6
7	SIREN CONTROL - FIRE ALARM			20	1		0.0		2	12	12	3/4	3/4	12	12	2		0.0		1	20		SPARE - FIRE ALARM		8
9	SIREN - FIRE ALARM			20	1	0.0			2	12	12	3/4	3/4	12	12	2	0.0			1	20		SPARE - FIRE ALARM		10
11	SPARE- FIRE ALARM			20	1		0.0		2	12	12	3/4	3/4	12	12	2		0.0		1	20		SPARE - FIRE ALARM		12
13	PROVISIONAL					0											0						PROVISIONAL		14
15	PROVISIONAL						0											0					PROVISIONAL		16
17	PROVISIONAL					0											0						PROVISIONAL		18
					SIDE CONNECTED KVA	0	0					PANEL CONNECTED KVA	0				0	0	SIDE CONNECTED KVA						
												PANEL DEMAND KVA	0										*DERATING FACTOR (80%)*		
												PANEL DEMAND FACTOR	100%										*DEMAND LOAD SIZE:* 0 *4MPS*		

LIGHTING AND APPLIANCE PANEL SCHEDULE

PANEL DESIGNATION: **PANEL D-N**
LOCATION: NVRSNK APP BAY
MOUNTING: FLUSH
ENCLOSURE: NEMA 1

BUS AMPS: 225
PHASE: 1
FED FROM: PANEL E
LOCATION: BOILER ROOM

MIN. A.I.C.: X KA
WIRE: 3

MAIN BREAKER: 100A
VOLTAGE: 120/208
NEUTRAL SIZE: 100%
TOTAL POLES: 18

NOTES:

CKT NO.	FEEDER/BRANCH CIRCUIT DESCRIPTION	AREA	CIRC. NOTES	BREAKER AMP	BREAKER POLES	LOAD (KVA) A	LOAD (KVA) B		WIRE NO.	WIRE SIZE	GND. SIZE	COND. SIZE	COND. SIZE	GND. SIZE	WIRE SIZE	WIRE NO.	LOAD (KVA) A	LOAD (KVA) B		BREAKER POLES	BREAKER AMP	CIRC. NOTES	FEEDER/BRANCH CIRCUIT DESCRIPTION	AREA	CKT NO.
1	APPARATUS ROOM LIGHTS			20	1	0.0			2	12	12	3/4	3/4	12	12	2	0.0			1	20		SPARE (ON)		2
3	SPARE (ON)			20	1		0.0		2	12	12	3/4	3/4	12	12	2		0.0		1	20		LIGHTS 1ST FLOOR		4
5	BASEMENT LIGHTS			20	1	0.0			2	12	12	3/4	3/4	12	12	2	0.0			1	20		LIGHTS 1ST FLOOR		6
7	SIREN CONTROL WIRE			20	1		0.0		2	12	12	3/4						0.0		1	20		SPARE		8
9	SIREN			20	1	0.0			2	12	12	3/4					0.0			1	20		SPARE		10
11	SPARE			20	1		0.0											0.0		1	20		SPARE		12
13	PROVISIONAL					0											0						PROVISIONAL		14
15	PROVISIONAL						0											0					PROVISIONAL		16
17	PROVISIONAL					0											0						PROVISIONAL		18
					SIDE CONNECTED KVA	0	0					PANEL CONNECTED KVA	0				0	0	SIDE CONNECTED KVA						
												PANEL DEMAND KVA	0										*DERATING FACTOR (80%)*		
												PANEL DEMAND FACTOR	100%										*DEMAND LOAD SIZE:* 0 *4MPS*		

LIGHTING AND APPLIANCE PANEL SCHEDULE

PANEL DESIGNATION: **PANEL F - N**
LOCATION: KYSTN APP BAY
MOUNTING: FLUSH
ENCLOSURE: NEMA 1

BUS AMPS: 225
PHASE: 1
FED FROM: PANEL E
LOCATION: BOILER ROOM

MIN. A.I.C.: X KA
WIRE: 3

MAIN BREAKER: 100A
VOLTAGE: 120/208
NEUTRAL SIZE: 100%
TOTAL POLES: 42

NOTES:

CKT NO.	FEEDER/BRANCH CIRCUIT DESCRIPTION	AREA	CIRC. NOTES	BREAKER AMP	BREAKER POLES	LOAD (KVA) A	LOAD (KVA) B		WIRE NO.	WIRE SIZE	GND. SIZE	COND. SIZE	COND. SIZE	GND. SIZE	WIRE SIZE	WIRE NO.	LOAD (KVA) A	LOAD (KVA) B		BREAKER POLES	BREAKER AMP	CIRC. NOTES	FEEDER/BRANCH CIRCUIT DESCRIPTION	AREA	CKT NO.
1	LOUNGE LIGHT			20	1	0.0			2	12	12	3/4	3/4	12	12	2	0.0			1	20		SPARE (ON)		2
3	APPARATUS ROOM LIGHTS			20	1		0.0		2	12	12	3/4	3/4	12	12	2		0.0		1	20		LIGHTS 1ST FLOOR		4
5	BASEMENT LIGHTS			20	1	0.0			2	12	12	3/4	3/4	12	12	2	0.0			1	20		LIGHTS 2ND FLOOR		6
7	SIREN CONTROL			20	1		0.0		2	12	12	3/4						0.0		1	20		SPARE		8
9	SIREN			20	1	0.0			2	12	12	3/4					0.0			1	20		SPARE		10
11	SPARE			20	1		0.0											0.0		1	20		SPARE		12
13	PROVISIONAL					0											0						PROVISIONAL		14
15	PROVISIONAL						0											0					PROVISIONAL		16
17	PROVISIONAL					0											0						PROVISIONAL		18
					SIDE CONNECTED KVA	0	0					PANEL CONNECTED KVA	0				0	0	SIDE CONNECTED KVA						
												PANEL DEMAND KVA	0										*DERATING FACTOR (80%)*		
												PANEL DEMAND FACTOR	100%										*DEMAND LOAD SIZE:* 0 *4MPS*		

PRELIMINARY - NOT FOR CONSTRUCTION

BUCHART HORN
ENGINEERS • ARCHITECTS • PLANNERS

MEP/F
Buchart Horn Architects
445 West Philadelphia Street
York, PA 17401
717.852.1400

READING FIRE DEPARTMENT ENGINE 3, 3 rd & COURT
GENERATOR / BOILER REPLACEMENT
15 N 3 rd STREET
READING, PA

DEPARTMENT OF PUBLIC WORKS, CITY OF READING, PENNSYLVANIA
815 WASHINGTON ST.
READING, PA

REVISIONS

MARK	ISSUED DATE	DESCRIPTION

PROJECT NO: 81083-01
ISSUED DATE: 06/05/20
DRAWN BY: WCA
CHECKED BY: JJG

© BUCHART HORN, INC.

SHEET TITLE:

PANEL SCHEDULES

SHEET NO:

E-603