DocuSign Envelope ID: 8DBEB8AA-0E8A-4E60-958F-1F24043B8B5F

DocuSign Envelope ID: 8C8829B7-93A5-40A2-9DFD-ACDCBCE2BFC5

#builtbetter
Boyle
Construction Management

Contract
SC-2010 52-001

Boyle Construction
1209 Hausman Road, Suite B
Allentown, Pennsylvania 18104-9300
Phone: 484-223-0726
Fax: (484) 223-0767

RECEIVED
NOV 05 2021
By

Project: 2010 52 - City of Reading Fire Station
9th & Marion Streets
Reading, Pennsylvania 19604

General Construction

DATE CREATED:	10/08/2021		
CONTRACT COMPANY:	Perrotto Builder, Ltd. 426 Warren Street Reading, Pennsylvania 19601 Phone: (610) 374-9423	**CREATED BY:**	Robert Sabol **(Boyle Construction, Inc.)** 1209 Hausman Road, Suite B Allentown, Pennsylvania 18104-9300
CONTRACT STATUS:	Out for Signature	**EXECUTED:**	No
START DATE:		**SIGNED CONTRACT RECEIVED DATE:**	
ESTIMATED COMPLETION DATE:		**ACTUAL COMPLETION DATE:**	
DEFAULT RETAINAGE:	10.0%		

DESCRIPTION:

INCLUSIONS:

EXCLUSIONS:

ATTACHMENTS:
A132-2019 - Final - 001 - Perrotto R05.pdf, 2010 52 - Perrotto - Exhibit B-H R01.pdf, 2010 52 - Perrotto - Exhibit A.pdf

#	Budget Code	Description	Amount
1	99 CM Primes-99-2A.S General Trades Allowance.Subcontractors	Allowance 1	$125,000.00
2	99 CM Primes-99-2A.S General Trades Allowance.Subcontractors	Allowance 2	$20,000.00
3	99 CM Primes-99-2A.S General Trades Allowance.Subcontractors	Allowance 3	$10,000.00
4	99 CM Primes-99-2A.S General Trades Allowance.Subcontractors	Allowance 4	$50,000.00
5	99 CM Primes-99-2A.S General Trades Allowance.Subcontractors	Allowance 5	$75,000.00
6	99 CM Primes-99-2.S General Trades Prime.Subcontractors	Bonds & Insurance	$89,200.00
7	99 CM Primes-99-2.S General Trades Prime.Subcontractors	PennBid	$5,300.00
8	99 CM Primes-99-2.S General Trades Prime.Subcontractors	Fees	$2,000.00

dn

DocuSign Envelope ID: 8C8829B7-93A5-40A2-9DFD-ACDCBCE2BFC5

#builtbetter
Boyle
Construction Management

Contract
SC-2010 52-001

#	Budget Code	Description	Amount
9	99 CM Primes-99-2.S General Trades Prime.Subcontractors	Spervision	$95,300.00
10	99 CM Primes-99-2.S General Trades Prime.Subcontractors	Scheduling	$6,500.00
11	99 CM Primes-99-2.S General Trades Prime.Subcontractors	Security	$13,000.00
12	99 CM Primes-99-2.S General Trades Prime.Subcontractors	Quality Control	$2,000.00
13	99 CM Primes-99-2.S General Trades Prime.Subcontractors	Temporary Facilities	$5,000.00
14	99 CM Primes-99-2.S General Trades Prime.Subcontractors	Temporary Heat/Controls	$5,000.00
15	99 CM Primes-99-2.S General Trades Prime.Subcontractors	Temporary Offices	$22,000.00
16	99 CM Primes-99-2.S General Trades Prime.Subcontractors	Sanitary Facilities	$5,300.00
17	99 CM Primes-99-2.S General Trades Prime.Subcontractors	Vehicles/Fuel	$6,000.00
18	99 CM Primes-99-2.S General Trades Prime.Subcontractors	Temporary Signage	$10,800.00
19	99 CM Primes-99-2.S General Trades Prime.Subcontractors	Temp Protection	$12,000.00
20	99 CM Primes-99-2.S General Trades Prime.Subcontractors	Temp Signage	$1,800.00
21	99 CM Primes-99-2.S General Trades Prime.Subcontractors	Mobilization	$12,000.00
22	99 CM Primes-99-2.S General Trades Prime.Subcontractors	Demobilization	$3,000.00
23	99 CM Primes-99-2.S General Trades Prime.Subcontractors	Layout/Surveying	$10,000.00
24	99 CM Primes-99-2.S General Trades Prime.Subcontractors	Progress Cleaning	$11,500.00
25	99 CM Primes-99-2.S General Trades Prime.Subcontractors	Construction Dumpsters	$8,500.00
26	99 CM Primes-99-2.S General Trades Prime.Subcontractors	Final Cleaning	$5,000.00

DocuSign Envelope ID: 8C8829B7-93A5-40A2-9DFD-ACDCBCE2BFC5

#builtbetter
Boyle
Construction Management

Contract
SC-2010 52-001

#	Budget Code	Description	Amount
27	99 CM Primes-99-2.S General Trades Prime.Subcontractors	Operation & Maintenance	$1,500.00
28	99 CM Primes-99-2.S General Trades Prime.Subcontractors	Footings	$105,000.00
29	99 CM Primes-99-2.S General Trades Prime.Subcontractors	Slab on Grade	$120,000.00
30	99 CM Primes-99-2.S General Trades Prime.Subcontractors	Slab on Deck	$100,000.00
31	99 CM Primes-99-2.S General Trades Prime.Subcontractors	Masonry Brick Materials	$41,500.00
32	99 CM Primes-99-2.S General Trades Prime.Subcontractors	CMU Material	$246,500.00
33	99 CM Primes-99-2.S General Trades Prime.Subcontractors	Ground Face CMU	$82,000.00
34	99 CM Primes-99-2.S General Trades Prime.Subcontractors	Masonry Labor	$290,000.00
35	99 CM Primes-99-2.S General Trades Prime.Subcontractors	Steel Shop Drawings	$17,500.00
36	99 CM Primes-99-2.S General Trades Prime.Subcontractors	Steel	$275,000.00
37	99 CM Primes-99-2.S General Trades Prime.Subcontractors	Steel Fabrication/Delivery	$105,000.00
38	99 CM Primes-99-2.S General Trades Prime.Subcontractors	Metal Deck	$124,500.00
39	99 CM Primes-99-2.S General Trades Prime.Subcontractors	Steel Erection	$108,000.00
40	99 CM Primes-99-2.S General Trades Prime.Subcontractors	Pan Stairs	$15,000.00
41	99 CM Primes-99-2.S General Trades Prime.Subcontractors	Site Concrete-driveway/pad	$20,200.00
42	99 CM Primes-99-2.S General Trades Prime.Subcontractors	Miscellaneous Steel	$203,000.00
43	99 CM Primes-99-2.S General Trades Prime.Subcontractors	Rough Carpentry	$25,600.00
44	99 CM Primes-99-2.S General Trades Prime.Subcontractors	Sheathing	$9,600.00

#builtbetter
Boyle
Construction Management

Contract
SC-2010 52-001

#	Budget Code	Description	Amount
45	99 CM Primes-99-2.S General Trades Prime.Subcontractors	Milwork, Solid Surfaces	$86,000.00
46	99 CM Primes-99-2.S General Trades Prime.Subcontractors	Dampproofing	$13,700.00
47	99 CM Primes-99-2.S General Trades Prime.Subcontractors	Thermal Insulation	$19,000.00
48	99 CM Primes-99-2.S General Trades Prime.Subcontractors	Weather Barriers	$24,000.00
49	99 CM Primes-99-2.S General Trades Prime.Subcontractors	Roof Accessories	$35,000.00
50	99 CM Primes-99-2.S General Trades Prime.Subcontractors	Wall Panels	$215,000.00
51	99 CM Primes-99-2.S General Trades Prime.Subcontractors	Fiber Cement Siding	$49,000.00
52	99 CM Primes-99-2.S General Trades Prime.Subcontractors	Roofing	$245,800.00
53	99 CM Primes-99-2.S General Trades Prime.Subcontractors	Firestopping	$1,100.00
54	99 CM Primes-99-2.S General Trades Prime.Subcontractors	Joint Sealants	$13,000.00
55	99 CM Primes-99-2.S General Trades Prime.Subcontractors	Expansion Control	$2,900.00
56	99 CM Primes-99-2.S General Trades Prime.Subcontractors	Doors, Frames & Hardware	$147,100.00
57	99 CM Primes-99-2.S General Trades Prime.Subcontractors	Overhead, Coiling, 4-Fold Doors	$188,000.00
58	99 CM Primes-99-2.S General Trades Prime.Subcontractors	Aluminum Entrances/Storefronts	$227,000.00
59	99 CM Primes-99-2.S General Trades Prime.Subcontractors	Gypsum Board Assemblies	$240,000.00
60	99 CM Primes-99-2.S General Trades Prime.Subcontractors	Ceilings	$85,000.00
61	99 CM Primes-99-2.S General Trades Prime.Subcontractors	Tile	$56,500.00
62	99 CM Primes-99-2.S General Trades Prime.Subcontractors	Athletic Flooring	$20,000.00

dm

DocuSign Envelope ID: 8C8829B7-93A5-40A2-9DFD-ACDCBCE2BFC5

#builtbetter
Boyle
Construction Management

Contract
SC-2010 52-001

#	Budget Code	Description	Amount
63	99 CM Primes-99-2.S General Trades Prime.Subcontractors	Resilient Flooring	$50,800.00
64	99 CM Primes-99-2.S General Trades Prime.Subcontractors	Resinous Flooring	$83,800.00
65	99 CM Primes-99-2.S General Trades Prime.Subcontractors	Painting	$89,400.00
66	99 CM Primes-99-2.S General Trades Prime.Subcontractors	Signage	$68,800.00
67	99 CM Primes-99-2.S General Trades Prime.Subcontractors	Wall Protection	$13,800.00
68	99 CM Primes-99-2.S General Trades Prime.Subcontractors	Toilet Accessories	$6,500.00
69	99 CM Primes-99-2.S General Trades Prime.Subcontractors	Fire Extinguishers/Cabinets	$3,500.00
70	99 CM Primes-99-2.S General Trades Prime.Subcontractors	Metal Lockers	$14,400.00
71	99 CM Primes-99-2.S General Trades Prime.Subcontractors	Fire Lockers	$34,900.00
72	99 CM Primes-99-2.S General Trades Prime.Subcontractors	Miscellaneous Assemblies	$10,400.00
73	99 CM Primes-99-2.S General Trades Prime.Subcontractors	Fire Poles	$15,000.00
74	99 CM Primes-99-2.S General Trades Prime.Subcontractors	Flag Pole	$4,000.00
75	99 CM Primes-99-2.S General Trades Prime.Subcontractors	Equipment	$12,700.00
76	99 CM Primes-99-2.S General Trades Prime.Subcontractors	Misc Assemblies	$3,200.00
77	99 CM Primes-99-2.S General Trades Prime.Subcontractors	Roller Shades	$21,000.00
78	99 CM Primes-99-2.S General Trades Prime.Subcontractors	Elevators	$83,800.00
79	99 CM Primes-99-2.S General Trades Prime.Subcontractors	Crane	$9,000.00
80	99 CM Primes-99-2.S General Trades Prime.Subcontractors	Mobilization-site	$13,500.00

DocuSign Envelope ID: 8C8829B7-93A5-40A2-9DFD-ACDCBCE2BFC5

#builtbetter
Boyle
Construction Management

Contract
SC-2010 52-001

#	Budget Code	Description	Amount
81	99 CM Primes-99-2.S General Trades Prime.Subcontractors	E&S	$22,500.00
82	99 CM Primes-99-2.S General Trades Prime.Subcontractors	Demo	$10,000.00
83	99 CM Primes-99-2.S General Trades Prime.Subcontractors	Soils Exc.	$149,500.00
84	99 CM Primes-99-2.S General Trades Prime.Subcontractors	Soils Backfill	$180,300.00
85	99 CM Primes-99-2.S General Trades Prime.Subcontractors	Building	$43,200.00
86	99 CM Primes-99-2.S General Trades Prime.Subcontractors	Storm	$127,000.00
87	99 CM Primes-99-2.S General Trades Prime.Subcontractors	Misc Site	$49,400.00
88	99 CM Primes-99-2.S General Trades Prime.Subcontractors	Shoring Materials	$235,000.00
89	99 CM Primes-99-2.S General Trades Prime.Subcontractors	Shoring Labor	$174,000.00
90	99 CM Primes-99-2.S General Trades Prime.Subcontractors	Shoring Equipment	$113,000.00
91	99 CM Primes-99-2.S General Trades Prime.Subcontractors	Asphalt Paving/Markings/Signs	$40,200.00
92	99 CM Primes-99-2.S General Trades Prime.Subcontractors	Fence	$15,000.00
93	99 CM Primes-99-2.S General Trades Prime.Subcontractors	Benches	$3,700.00
94	99 CM Primes-99-2.S General Trades Prime.Subcontractors	Landscaping	$5,000.00
95	99 CM Primes-99-2.S General Trades Prime.Subcontractors	Sidewalk	$24,500.00
96	99 CM Primes-99-2.S General Trades Prime.Subcontractors	Curb	$18,800.00
97	99 CM Primes-99-2.S General Trades Prime.Subcontractors	Bollards	$7,200.00
98	99 CM Primes-99-2.S General Trades Prime.Subcontractors	Planter/Retaining Wall	$8,500.00

DocuSign Envelope ID: 8C8829B7-93A5-40A2-9DFD-ACDCBCE2BFC5

#builtbetter
Boyle
Construction Management

Contract
SC-2010 52-001

#	Budget Code	Description	Amount
99	99 CM Primes-99-2.S General Trades Prime.Subcontractors	Flashing Signal	$13,500.00
100	99 CM Primes-99-2.S General Trades Prime.Subcontractors	Alternate 1 add $75,000 (add to base bid if alternate is accepted)	$0.00
		Grand Total:	$5,948,000.00

Boyle Construction
1209 Hausman Road, Suite B
Allentown, Pennsylvania 18104-9300

SIGNATURE DATE

Perrotto Builder, Ltd.
426 Warren Street
Reading, Pennsylvania 19601

* 11/10/21

SIGNATURE DATE

* See attached Exhibit I

DocuSign Envelope ID: 8DBEB8AA-0E8A-4E60-958F-1F24043B8B5F

DocuSign Envelope ID: 8C8829B7-93A5-40A2-9DFD-ACDCBCE2BFC5

RECEIVED
NOV 05 2021
By

AIA® Document A132™ – 2019

Standard Form of Agreement Between Owner and Contractor, Construction Manager as Adviser Edition

AGREEMENT made as of the 30 day of September in the year 2021
(In words, indicate day, month, and year.)

BETWEEN the Owner:
(Name, legal status, address, and other information)

City of Reading
815 Washington St., Room 2-45
Reading, PA 19601

and the Contractor:
(Name, legal status, address, and other information)

Perrotto Builders, Ltd.
426 Warren Street
Reading, PA 19601
Telephone Number: (610) 374-9423

for the following Project:
(Name, location, and detailed description)

2010 52 City of Reading Fire Station
9th & Marion Streets
Reading, PA 19604

The Construction Manager:
(Name, legal status, address, and other information)

Boyle Construction, Inc.
1209 Hausman Road, Suite B
Allentown, PA 18104
Telephone Number: (484) 223-0726
Fax Number: (484) 223-0767

The Architect:
(Name, legal status, address, and other information)

Manns Woodward Studio
10839-D Philadelphia Road
White Marsh, Maryland 21162
Telephone Number: (410) 344-1460

The Owner and Contractor agree as follows.

ADDITIONS AND DELETIONS:
The author of this document has added information needed for its completion. The author may also have revised the text of the original AIA standard form. An *Additions and Deletions Report* that notes added information as well as revisions to the standard form text is available from the author and should be reviewed. A vertical line in the left margin of this document indicates where the author has added necessary information and where the author has added to or deleted from the original AIA text.

This document has important legal consequences. Consultation with an attorney is encouraged with respect to its completion or modification.

This document is intended to be used in conjunction with AIA Documents A232™–2019, General Conditions of the Contract for Construction, Construction Manager as Adviser Edition; B132™–2019, Standard Form of Agreement Between Owner and Architect, Construction Manager as Adviser Edition; and C132™–2019, Standard Form of Agreement Between Owner and Construction Manager as Adviser. AIA Document A232™–2019 is adopted in this document by reference. Do not use with other general conditions unless this document is modified.

Init.
/

AIA Document A132™ – 2019. Copyright © 1975, 1980, 1992, 2009, and 2019 by The American Institute of Architects. All rights reserved. The "American Institute of Architects," "AIA," the AIA Logo, and "AIA Contract Documents" are registered trademarks and may not be used without permission. This document was produced by AIA software at 15:19:29 ET on 11/05/2021 under Order No.2581196875 which expires on 12/20/2021, is not for resale, is licensed for one-time use only, and may only be used in accordance with the AIA Contract Documents® Terms of Service. To report copyright violations, e-mail copyright@aia.org.
User Notes: (1332631386)

DocuSign Envelope ID: 8DBEB8AA-0E8A-4E60-958F-1F24043B8B5F

DocuSign Envelope ID: 8C8829B7-93A5-40A2-9DFD-ACDCBCE2BFC5

TABLE OF ARTICLES

1 THE CONTRACT DOCUMENTS

2 THE WORK OF THIS CONTRACT

3 DATE OF COMMENCEMENT AND DATES OF SUBSTANTIAL COMPLETION

4 CONTRACT SUM

5 PAYMENTS

6 DISPUTE RESOLUTION

7 TERMINATION OR SUSPENSION

8 MISCELLANEOUS PROVISIONS

9 ENUMERATION OF CONTRACT DOCUMENTS

EXHIBIT A INSURANCE AND BONDS
EXHIBIT B DETERMINATION OF THE COST OF THE WORK

ARTICLE 1 THE CONTRACT DOCUMENTS

The Contract Documents consist of this Agreement, Conditions of the Contract (General, Supplementary, and other Conditions), Drawings, Specifications, Addenda issued prior to execution of this Agreement, other documents listed in this Agreement, and Modifications issued after execution of this Agreement, all of which form the Contract, and are as fully a part of the Contract as if attached to this Agreement or repeated herein. The Contract represents the entire and integrated agreement between the parties hereto and supersedes prior negotiations, representations, or agreements, either written or oral. An enumeration of the Contract Documents, other than Modifications, appears in Article 9.

ARTICLE 2 THE WORK OF THIS CONTRACT

The Contractor shall fully execute the Work described in the Contract Documents, except as specifically indicated in the Contract Documents to be the responsibility of others.

ARTICLE 3 DATE OF COMMENCEMENT AND DATES OF SUBSTANTIAL COMPLETION

§ 3.1 The date of commencement of the Work shall be:
(Check one of the following boxes.)

[ ] The date of this Agreement.

[X] A date set forth in a notice to proceed issued by the Construction Manager. Please refer to the Milestone Schedule dated 7/06/21 attached hereto as Exhibit "E" and made a part of this Agreement.

[ ] Established as follows:
(Insert a date or a means to determine the date of commencement of the Work.)

If a date of commencement of the Work is not selected, then the date of commencement shall be the date of this Agreement.

§ 3.2 The Contract Time shall be measured from the date of commencement of the Work.

§ 3.3 Substantial Completion of the Project or Portions Thereof

§ 3.3.1 Subject to adjustments of the Contract Time as provided in the Contract Documents, the date of Substantial Completion of the Work of all of the Contractors for the Project will be:

AIA Document A132™ – 2019. Copyright © 1976, 1980, 1992, 2009, and 2019 by The American Institute of Architects. All rights reserved. The "American Institute of Architects," "AIA," the AIA Logo, and "AIA Contract Documents" are registered trademarks and may not be used without permission. This document was produced by AIA software at 15:19:29 ET on 11/05/2021 under Order No.2581196875 which expires on 12/20/2021, is not for resale, is licensed for one-time use only, and may only be used in accordance with the AIA Contract Documents® Terms of Service. To report copyright violations, e-mail copyright@aia.org.
User Notes: (1332631386)

DocuSign Envelope ID: 8DBEB8AA-0E8A-4E60-958F-1F24043B8B5F

DocuSign Envelope ID: 8C8829B7-93A5-40A2-9DFD-ACDCBCE2BFC5

(Insert the date of Substantial Completion of the Work of all Contractors for the Project.)

Refer to the Milestone Schedule dated 7/06/21 attached hereto as Exhibit "E" and made a part of this Agreement.

§ 3.3.2 Subject to adjustments of the Contract Time as provided in the Contract Documents, if portions of the Work of all of the Contractors for the Project are to be completed prior to Substantial Completion of the entire Work of all of the Contractors for the Project, the Contractors shall achieve Substantial Completion of such portions by the following dates:

Portion of Work	Substantial Completion Date
General Construction	Refer to the Milestone Schedule dated 7/06/21 attached hereto as Exhibit "E" and made a part of this Agreement.

§ 3.4 When the Work of this Contract, or any Portion Thereof, is Substantially Complete

§ 3.4.1 Subject to adjustments of the Contract Time as provided in the Contract Documents, the Contractor shall substantially complete the entire Work of this Contract:
(Check one of the following boxes and complete the necessary information.)

[ ] Not later than ( ) calendar days from the date of commencement of the Work.

[X] By the following date: Refer to the Milestone Schedule dated 7/06/21 attached hereto as Exhibit "E" and made a part of this Agreement.

§ 3.4.2 Subject to adjustments of the Contract Time as provided in the Contract Documents, if portions of the Work of this Contract are to be substantially complete prior to when the entire Work of this Contract shall be substantially complete, the Contractor shall substantially complete such portions by the following dates:

Portion of Work	Date to be substantially complete

§ 3.4.3 If the Contractor fails to substantially complete the Work of this Contract, or portions thereof, as provided in this Section 3.4, liquidated damages, if any, shall be assessed as set forth in Section 4.5.

ARTICLE 4 CONTRACT SUM

§ 4.1 The Owner shall pay the Contractor the Contract Sum in current funds for the Contractor's performance of the Contract. The Contract Sum shall be one of the following:
(Check the appropriate box.)

[X] Stipulated Sum, in accordance with Section 4.2 below

[ ] Cost of the Work plus the Contractor's Fee, in accordance with Section 4.3 below

[ ] Cost of the Work plus the Contractor's Fee with a Guaranteed Maximum Price, in accordance with Section 4.4 below

(Based on the selection above, complete Section 4.2, 4.3 or 4.4 below.)

§ 4.2 Stipulated Sum

§ 4.2.1 The Contract Sum shall be Five Million Nine Hundred Forty-Eight Thousand Dollars and Zero Cents ($ 5,948,000.00), subject to additions and deductions as provided in the Contract Documents.

§ 4.2.2 Alternates

§ 4.2.2.1 Alternates, if any, included in the Contract Sum:

Item	Price
1. N/A	

AIA Document A132™ – 2019. Copyright © 1975, 1980, 1992, 2009, and 2019 by The American Institute of Architects. All rights reserved. The "American Institute of Architects," "AIA," the AIA Logo, and "AIA Contract Documents" are registered trademarks and may not be used without permission. This document was produced by AIA software at 15:19:29 ET on 11/05/2021 under Order No.2581196875 which expires on 12/20/2021, is not for resale, is licensed for one-time use only, and may only be used in accordance with the AIA Contract Documents® Terms of Service. To report copyright violations, e-mail copyright@aia.org.
User Notes: (1332631386)

DocuSign Envelope ID: 8DBEB8AA-0E8A-4E60-958F-1F24043B8B5F

DocuSign Envelope ID: 8C8829B7-93A5-40A2-9DFD-ACDCBCE2BFC5

§ 4.2.2.2 Subject to the conditions noted below, the following alternates may be accepted by the Owner following execution of this Agreement. Upon acceptance, the Owner shall issue a Modification to this Agreement.
(Insert below each alternate and the conditions that must be met for the Owner to accept the alternate.)

Item	Price	Conditions for Acceptance
N/A		

§ 4.2.3 Allowances, if any, included in the Contract Sum:
(Identify each allowance.)

Item	Price
1. GC Owner Contingency	$125,000.00
2. Winter Conditions	$20,000.00
3. Additional HOP Work	$10,000.00
4. Sitework	$50,000.00
5. Unsuitable Soils/Rock	$75,000.00

§ 4.2.4 Unit prices, if any:
(Identify the item and state the unit price, and quantity limitations, if any, to which the unit price will be applicable.)

Item	Units and Limitations	Price per Unit ($0.00)
1. Removal of Unsatisfactory Soil	Cubic Yard	$45.00
2. Rock Removal	Cubic Yard	$350.00
3. Soil Moisture Reduction, Quicklime	1% Dry Wt./Sq. Yd. at Ft Depth	$150.00
4. PennDot 2A Fill	Cubic Yard	$55.00
5. #57 Stone Fill	Cubic Yard	$65.00
6. Granular Natural Soil Fill	Cubic Yard	$55.00
7. Concrete Curbing	Linear Foot	$45.00
8. Concrete Sidewalk	25 Square Feet	$400.00

(Paragraphs deleted)
(Table deleted)
(Paragraphs deleted)
(Table deleted)
(Paragraphs deleted)
(Table deleted)
(Paragraphs deleted)
(Table deleted)
(Paragraphs deleted)
(Table deleted)
(Paragraphs deleted)

ARTICLE 5 PAYMENTS

§ 5.1 Progress Payments

§ 5.1.1 Based upon Applications for Payment submitted to the Construction Manager by the Contractor, and Certificates for Payment issued by the Construction Manager and Architect, the Owner shall make progress payments on account of the Contract Sum, to the Contractor, as provided below and elsewhere in the Contract Documents.

§ 5.1.2 The period covered by each Application for Payment shall be one calendar month ending on the last day of the month, or as follows:

§ 5.1.3 Provided that an Application for Payment is received by the Construction Manager not later than the 25 day of a month, the Owner shall make payment of the amount certified to the Contractor not later than the first day of the following month. If an Application for Payment is received by the Construction Manager after the application date fixed

AIA Document A132™ – 2019. Copyright © 1975, 1980, 1992, 2009, and 2019 by The American Institute of Architects. All rights reserved. The "American Institute of Architects," "AIA," the AIA Logo, and "AIA Contract Documents" are registered trademarks and may not be used without permission. This document was produced by AIA software at 15:19:29 ET on 11/05/2021 under Order No.2581196875 which expires on 12/20/2021, is not for resale, is licensed for one-time use only, and may only be used in accordance with the AIA Contract Documents® Terms of Service. To report copyright violations, e-mail copyright@aia.org.
User Notes: (1332631386)

DocuSign Envelope ID: 8DBEB8AA-0E8A-4E60-958F-1F24043B8B5F

DocuSign Envelope ID: 8C8829B7-93A5-40A2-9DFD-ACDCBCE2BFC5

above, payment of the amount certified shall be made by the Owner not later than forty (40) days after the Construction Manager receives the Application for Payment.
(Federal, state or local laws may require payment within a certain period of time.)

§ 5.1.4 Progress Payments Where the Contract Sum is Based on a Stipulated Sum
§ 5.1.4.1 Each Application for Payment shall be based on the most recent schedule of values submitted by the Contractor in accordance with the Contract Documents. The schedule of values shall allocate the entire Contract Sum among the various portions of the Work. The schedule of values shall be prepared in such form, and supported by such data to substantiate its accuracy, as the Construction Manager and Architect may require. This schedule of values shall be used as a basis for reviewing the Contractor's Applications for Payment.

§ 5.1.4.2 Applications for Payment shall show the percentage of completion of each portion of the Work as of the end of the period covered by the Application for Payment.

§ 5.1.4.3 In accordance with AIA Document A232™–2019, General Conditions of the Contract for Construction, Construction Manager as Adviser Edition, and subject to other provisions of the Contract Documents, the amount of each progress payment shall be computed as follows:

.1 Take that portion of the Contract Sum properly allocable to completed Work as determined by multiplying the percentage completion of each portion of the Work by the share of the total Contract Sum allocated to that portion of the Work in the schedule of values, less retainage of ten percent (10 %). Pending final determination of cost to the Owner of changes in the Work, amounts not in dispute may be included as provided in Section 7.3.9 of the General Conditions;
.2 Add that portion of the Contract Sum properly allocable to materials and equipment delivered and suitably stored at the site for subsequent incorporation in the completed construction (or, if approved in advance by the Owner, suitably stored off the site at a location agreed upon in writing), less retainage of ten percent (10 %);
.3 Subtract the aggregate of previous payments made by the Owner; and
.4 Subtract amounts, if any, for which the Construction Manager or Architect has withheld or nullified a Certificate for Payment as provided in Section 9.5 of the General Conditions.

(Paragraphs deleted)
§ 5.1.7 Retainage
§ 5.1.7.1 For each progress payment made prior to when the Work of this Contract is substantially complete, the Owner may withhold the following amount, as retainage, from the payment otherwise due:
(Insert a percentage or amount to be withheld as retainage from each Application for Payment. The amount of retainage may be limited by governing law.)

Ten Percent (10%)

§ 5.1.7.1.1 The following items are not subject to retainage:
(Insert any items not subject to the withholding of retainage, such as general conditions, insurance, etc.)

N/A

§ 5.1.7.2 Reduction or limitation of retainage, if any, shall be as follows:
(If the retainage established in Section 5.1.7.1 is to be modified prior to when the entire Work of this Contract is substantially complete, including modifications for completion of portions of the Work as provided in Section 3.4.2, insert provisions for such modifications.)

Refer to Section 1.6.D.1.9.11.1 of the Supplemental General Conditions

§ 5.1.7.3 Except as set forth in this Section 5.1.7.3, when the Work of this Contract is substantially complete, the Contractor may submit an Application for Payment that includes the retainage withheld from prior Applications for Payment pursuant to this Section 5.1.7. The Application for Payment submitted when the Work of this Contract is substantially complete shall not include retainage as follows:

AIA Document A132™ – 2019. Copyright © 1975, 1980, 1992, 2009, and 2019 by The American Institute of Architects. All rights reserved. The "American Institute of Architects," "AIA," the AIA Logo, and "AIA Contract Documents" are registered trademarks and may not be used without permission. This document was produced by AIA software at 15:19:29 ET on 11/05/2021 under Order No.2581196875 which expires on 12/20/2021, is not for resale, is licensed for one-time use only, and may only be used in accordance with the AIA Contract Documents® Terms of Service. To report copyright violations, e-mail copyright@aia.org.
User Notes: (1332631386)

(Insert any other conditions for release of retainage when the Work of this Contract is substantially complete, or upon Substantial Completion of the Work of all Contractors on the Project or portions thereof.)

Refer to Section 1.6.E.1.9.11.2 of the Supplemental General Conditions

§ 5.2 Final Payment

§ 5.2.1 Final Payment Where the Contract Sum is Based on a Stipulated Sum

§ 5.2.1.1 Final payment, constituting the entire unpaid balance of the Contract Sum, shall be made by the Owner to the Contractor when

.1 the Contractor has fully performed the Contract except for the Contractor's responsibility to correct Work as provided in Article 12 of AIA Document A232–2019, and to satisfy other requirements, if any, which extend beyond final payment; and

.2 a final Certificate for Payment or Project Certificate for Payment has been issued by the Architect.

§ 5.2.1.2 The Owner's final payment to the Contractor shall be made no later than 30 days after the issuance of the final Certificate for Payment or Project Certificate for Payment, or as follows:

N/A

(Paragraphs deleted)

§ 5.3 Payments due and unpaid under the Contract shall bear interest from the date payment is due at the rate stated below, or in the absence thereof, at the legal rate prevailing from time to time at the place where the Project is located.
(Insert rate of interest agreed upon, if any.)

N/A

ARTICLE 6 DISPUTE RESOLUTION

§ 6.1 Initial Decision Maker

The Architect will serve as Initial Decision Maker pursuant to Article 15 of AIA Document A232–2019, unless the parties appoint below another individual, not a party to this Agreement, to serve as Initial Decision Maker.
(If the parties mutually agree, insert the name, address and other contact information of the Initial Decision Maker, if other than the Architect.)

Tony Ganguzza, P.E., Vice President
Boyle Construction, Inc.
1209 Hausman Rd., Suite B
Allentown, PA 18104

§ 6.2 Binding Dispute Resolution

For any Claim subject to, but not resolved by, mediation through the Berks County Bar Association Alternative Dispute Program, the method of binding dispute resolution shall be as follows:
(Check the appropriate box.)

[ ] Arbitration pursuant to Article 15 of AIA Document A232–2019.

[X] Litigation in a court of competent jurisdiction.

[ ] Other: *(Specify)*

If the Owner and Contractor do not select a method of binding dispute resolution, or do not subsequently agree in writing to a binding dispute resolution method other than litigation, Claims will be resolved by litigation in a court of competent jurisdiction.

AIA Document A132™ – 2019. Copyright © 1975, 1980, 1992, 2009, and 2019 by The American Institute of Architects. All rights reserved. The "American Institute of Architects," "AIA," the AIA Logo, and "AIA Contract Documents" are registered trademarks and may not be used without permission. This document was produced by AIA software at 15:19:29 ET on 11/05/2021 under Order No.2581196875 which expires on 12/20/2021, is not for resale, is licensed for one-time use only, and may only be used in accordance with the AIA Contract Documents® Terms of Service. To report copyright violations, e-mail copyright@aia.org.
User Notes:
(1332631386)

DocuSign Envelope ID: 8DBEB8AA-0E8A-4E60-958F-1F24043B8B5F

DocuSign Envelope ID: 8C8829B7-93A5-40A2-9DFD-ACDCBCE2BFC5

ARTICLE 7 TERMINATION OR SUSPENSION

§ 7.1 Where the Contract Sum is a Stipulated Sum

§ 7.1.1 The Contract may be terminated by the Owner or the Contractor as provided in Article 14 of AIA Document A232–2019.

§ 7.1.1.1 If the Contract is terminated for the Owner's convenience in accordance with Article 14 of AIA Document A232–2019, then the Owner shall pay the Contractor a termination fee as follows:
(Insert the amount of, or method for determining, the fee, if any, payable to the Contractor following a termination for the Owner's convenience.)

N/A

§ 7.1.2 The Work may be suspended by the Owner as provided in Article 14 of AIA Document A232–2019.

§ 7.2 Where the Contract Sum is Based on the Cost of the Work with or without a Guaranteed Maximum Price

§ 7.2.1 Termination

§ 7.2.1.1 The Contract may be terminated by the Owner or the Contractor as provided in Article 14 of AIA Document A232–2019.

§ 7.2.1.2 Termination by the Owner for Cause

§ 7.2.1.2.1 If the Owner terminates the Contract for cause as provided in Article 14 of AIA Document A232–2019, the Owner shall then only pay the Contractor an amount as follows:

- **.1** Take the Cost of the Work incurred by the Contractor to the date of termination;
- **.2** Add the Contractor's Fee, computed upon the Cost of the Work to the date of termination at the rate stated in Section 4.3.2 or 4.4.2, as applicable, or, if the Contractor's Fee is stated as a fixed sum in that Section, an amount that bears the same ratio to that fixed-sum Fee as the Cost of the Work at the time of termination bears to a reasonable estimate of the probable Cost of the Work upon its completion;
- **.3** Subtract the aggregate of previous payments made by the Owner; and
- **.4** Subtract the costs and damages incurred, or to be incurred, by the Owner under Article 14 of AIA Document A232–2019.

(Paragraph deleted)

§ 7.2.1.2.3 The Owner shall also pay the Contractor fair compensation, either by purchase or rental at the election of the Owner, for any equipment owned by the Contractor that the Owner elects to retain and that is not otherwise included in the Cost of the Work under Section 7.2.1.2.1.1. To the extent that the Owner elects to take legal assignment of subcontracts and purchase orders (including rental agreements), the Contractor shall, as a condition of receiving the payments referred to in this Article 7, execute and deliver all such papers and take all such steps, including the legal assignment of such subcontracts and other contractual rights of the Contractor, as the Owner may require for the purpose of fully vesting in the Owner the rights and benefits of the Contractor under such subcontracts or purchase orders. All Subcontracts, purchase orders and rental agreements entered into by the Contractor will contain provisions allowing for assignment to the Owner as described above.

§ 7.2.1.3 Termination by the Owner for Convenience

If the Owner terminates the Contract for convenience in accordance with Article 14 of AIA Document A232–2019, then the Owner shall pay the Contractor a termination fee as follows:
(Insert the amount of or method for determining the fee, if any, payable to the Contractor following a termination for the Owner's convenience.)

0

§ 7.3 Suspension

The Work may be suspended by the Owner as provided in Article 14 of AIA Document A232–2019; in such case, the Contract Sum and Contract Time shall be increased as provided in Article 14 of AIA Document A232–2019, except that the term "profit" shall be understood to mean the Contractor's Fee as described in Section 4.3.2 or 4.4.2, as applicable, of this Agreement.

AIA Document A132™ – 2019. Copyright © 1975, 1980, 1992, 2009, and 2019 by The American Institute of Architects. All rights reserved. The "American Institute of Architects," "AIA," the AIA Logo, and "AIA Contract Documents" are registered trademarks and may not be used without permission. This document was produced by AIA software at 15:19:29 ET on 11/05/2021 under Order No.2581196875 which expires on 12/20/2021, is not for resale, is licensed for one-time use only, and may only be used in accordance with the AIA Contract Documents® Terms of Service. To report copyright violations, e-mail copyright@aia.org.
User Notes: (1332631386)

DocuSign Envelope ID: 8DBEB8AA-0E8A-4E60-958F-1F24043B8B5F

DocuSign Envelope ID: 8C8829B7-93A5-40A2-9DFD-ACDCBCE2BFC5

ARTICLE 8 MISCELLANEOUS PROVISIONS

§ 8.1 Where reference is made in this Agreement to a provision of AIA Document A232–2019 or another Contract Document, the reference refers to that provision as amended or supplemented by other provisions of the Contract Documents.

§ 8.2 The Owner's representative:
(Name, address, email address, and other information)

Tony Ganguzza, P.E., Vice President
Boyle Construction, Inc.
1209 Hausman Rd., Suite B
Allentown, PA 18104
Telephone: (484) 223-0726

§ 8.3 The Contractor's representative:
(Name, address, email address, and other information)

James Radwanski
Perrotto Builders, Ltd.
426 Warren Street
Reading, PA 19601
Telephone Number: (610) 374-9423

§ 8.4 Neither the Owner's nor the Contractor's representative shall be changed without ten days' prior notice to the other party.

§ 8.5 Insurance and Bonds

§ 8.5.1 The Owner and the Contractor shall purchase and maintain insurance as set forth in AIA Document A132™–2019, Standard Form of Agreement Between Owner and Contractor, Construction Manager as Adviser Edition, Exhibit A, Insurance and Bonds, and elsewhere in the Contract Documents.

§ 8.5.2 The Contractor shall provide bonds as set forth in AIA Document A132™–2019, Exhibit A, and elsewhere in the Contract Documents.

§ 8.6 Notice in electronic format, pursuant to Article 1 of AIA Document A232–2019, may be given in accordance with AIA Document E203™–2013, Building Information Modeling and Digital Data Exhibit, if completed, or as otherwise set forth below:
(If other than in accordance with AIA Document E203–2013, insert requirements for delivering notice in electronic format such as name, title, and email address of the recipient and whether and how the system will be required to generate a read receipt for the transmission.)

(Paragraphs deleted)
§ 8.8 Other provisions:

ARTICLE 9 ENUMERATION OF CONTRACT DOCUMENTS

§ 9.1 This Agreement is comprised of the following documents:

- .1 AIA Document A132™–2019, Standard Form of Agreement Between Owner and Contractor, Construction Manager as Adviser Edition
- .2 AIA Document A132™–2019, Exhibit A, Insurance and Bonds Exhibit
- .3 AIA Document A232™–2019, General Conditions of the Contract for Construction, Construction Manager as Adviser Edition
- .4 AIA Document E203™–2013, Building Information Modeling and Digital Data Exhibit, dated as indicated below:

AIA Document A132™ – 2019. Copyright © 1975, 1980, 1992, 2009, and 2019 by The American Institute of Architects. All rights reserved. The "American Institute of Architects," "AIA," the AIA Logo, and "AIA Contract Documents" are registered trademarks and may not be used without permission. This document was produced by AIA software at 15:19:29 ET on 11/05/2021 under Order No.2581196875 which expires on 12/20/2021, is not for resale, is licensed for one-time use only, and may only be used in accordance with the AIA Contract Documents® Terms of Service. To report copyright violations, e-mail copyright@aia.org.
User Notes: (1332631386)

(Insert the date of the E203-2013 incorporated into this Agreement.)

.5 Drawings

Number	Title	Date
G001	Bid-Permit Drawings	July 09, 2021

.6 Specifications

Section	Title	Date	Pages
00 0001	Table of Contents	July 09, 2021	6

.7 Addenda, if any:

Number	Date	Pages
Addendum 1	July 29, 2021	495
Addendum 2	Aug. 13, 2021	02
Addendum 3	Aug. 19, 2021	01
Addendum 4	Aug. 20, 2021	22
Addendum 5	Aug. 25, 2021	20
Addendum 6	Aug. 30, 2021	04
Addendum 7	Aug. 30, 2021	02

Portions of Addenda relating to bidding or proposal requirements are not part of the Contract Documents unless the bidding or proposal requirements are also enumerated in this Article 9.

.8 Other Exhibits:
(Check all boxes that apply and include appropriate information identifying the exhibit where required.)

[ ] AIA Document A132™–2019, Exhibit B, Determination of the Cost of the Work

[ ] AIA Document E235™–2019, Sustainable Projects Exhibit, Construction Manager as Adviser Edition, dated as indicated below:
(Insert the date of the E235-2019 incorporated into this Agreement.)

[ ] The Sustainability Plan:

Title	Date	Pages

[ ] Supplementary and other Conditions of the Contract:

Document	Title	Date	Pages

.9 Other documents, if any, listed below:
(List here any additional documents that are intended to form part of the Contract Documents. AIA Document A232–2019 provides that the advertisement or invitation to bid, Instructions to Bidders, sample forms, the Contractor's bid or proposal, portions of Addenda relating to bidding or proposal requirements, and other information furnished by the Owner in anticipation of receiving bids or proposals, are not part of the Contract Documents unless enumerated in this Agreement. Any such documents should be listed here only if intended to be part of the Contract Documents.)

AIA Document A132™ – 2019. Copyright © 1975, 1980, 1992, 2009, and 2019 by The American Institute of Architects. All rights reserved. The "American Institute of Architects," "AIA," the AIA Logo, and "AIA Contract Documents" are registered trademarks and may not be used without permission. This document was produced by AIA software at 15:19:29 ET on 11/05/2021 under Order No.2581196875 which expires on 12/20/2021, is not for resale, is licensed for one-time use only, and may only be used in accordance with the AIA Contract Documents® Terms of Service. To report copyright violations, e-mail copyright@aia.org.
User Notes:
(1332631386)

DocuSign Envelope ID: 8DBEB8AA-0E8A-4E60-958F-1F24043B8B5F

DocuSign Envelope ID: 8C8829B7-93A5-40A2-9DFD-ACDCBCE2BFC5

1. Exhibit "A" Bid Submission Documents dated Sept. 09, 2021 attached hereto and made a part of this agreement.
2. Exhibit "B" Table of Contents attached hereto and made a part of this agreement.
3. Exhibit "C" Schedule of Values attached hereto and made a part of this agreement.
4. See Exhibit "D" Drawing Index attached hereto and made a part of this agreement.
5. See Exhibit "E" Milestone Schedule dated 7/06/21 attached hereto and made a part of this agreement.
6. See Exhibit "F" Supplementary Conditions, attached hereto and made a part of this agreement.
7. See Exhibit "G" Certificate of Insurance, attached hereto and made a part of this agreement.
8. See Exhibit "H" Payment and Performance Bonds, attached hereto and made a part of this agreement.

This Agreement is entered into as of the day and year first written above.

DocuSigned by:
Eddie Moran
419F82670B2C4DF...

OWNER *(Signature)*

Eddie Moran Mayor

(Printed name and title)

*

CONTRACTOR *(Signature)*

James P. Radwanski, President/Owner

(Printed name and title)

* See attached Exhibit I

AIA Document A132™ – 2019. Copyright © 1975, 1980, 1992, 2009, and 2019 by The American Institute of Architects. All rights reserved. The "American Institute of Architects," "AIA," the AIA Logo, and "AIA Contract Documents" are registered trademarks and may not be used without permission. This document was produced by AIA software at 15:19:29 ET on 11/05/2021 under Order No.2581196875 which expires on 12/20/2021, is not for resale, is licensed for one-time use only, and may only be used in accordance with the AIA Contract Documents® Terms of Service. To report copyright violations, e-mail copyright@aia.org.
User Notes: (1332631386)

dn

DocuSign Envelope ID: 8DBEB8AA-0E8A-4E60-958F-1F24043B8B5F

DocuSign Envelope ID: 8C8829B7-93A5-40A2-9DFD-ACDCBCE2BFC5

Additions and Deletions Report for
AIA® Document A132™ – 2019

This Additions and Deletions Report, as defined on page 1 of the associated document, reproduces below all text the author has added to the standard form AIA document in order to complete it, as well as any text the author may have added to or deleted from the original AIA text. Added text is shown underlined. Deleted text is indicated with a horizontal line through the original AIA text.

Note: This Additions and Deletions Report is provided for information purposes only and is not incorporated into or constitute any part of the associated AIA document. This Additions and Deletions Report and its associated document were generated simultaneously by AIA software at 15:19:29 ET on 11/05/2021.

PAGE 1

AGREEMENT made as of the 30 day of September in the year 2021

...

City of Reading
815 Washington St., Room 2-45
Reading, PA 19601

...

Perrotto Builders, Ltd.
426 Warren Street
Reading, PA 19601
Telephone Number: (610) 374-9423

...

2010 52 City of Reading Fire Station
9th & Marion Streets
Reading, PA 19604

...

Boyle Construction, Inc.
1209 Hausman Road, Suite B
Allentown, PA 18104
Telephone Number: (484) 223-0726
Fax Number: (484) 223-0767

...

Manns Woodward Studio
10839-D Philadelphia Road
White Marsh, Maryland 21162
Telephone Number: (410) 344-1460

PAGE 2

[X] A date set forth in a notice to proceed issued by ~~the Owner.~~ the Construction Manager. Please refer to the Milestone Schedule dated 7/06/21 attached hereto as Exhibit "E" and made a part of this Agreement.

PAGE 3

Additions and Deletions Report for AIA Document A132™ – 2019. Copyright © 1975, 1980, 1992, 2009, and 2019 by The American Institute of Architects. All rights reserved. The "American Institute of Architects," "AIA," the AIA Logo, and "AIA Contract Documents" are registered trademarks and may not be used without permission. This document was produced by AIA software at 15:19:29 ET on 11/05/2021 under Order No.2581196875 which expires on 12/20/2021, is not for resale, is licensed for one-time use only, and may only be used in accordance with the AIA Contract Documents® Terms of Service. To report copyright violations, e-mail copyright@aia.org.
User Notes:

(1332631386)

dn

Refer to the Milestone Schedule dated 7/06/21 attached hereto as Exhibit "E" and made a part of this Agreement.

...

General Construction	Refer to the Milestone Schedule dated 7/06/21 attached hereto as Exhibit "E" and made a part of this Agreement.

...

[X] By the following date: Refer to the Milestone Schedule dated 7/06/21 attached hereto as Exhibit "E" and made a part of this Agreement.

...

[X] Stipulated Sum, in accordance with Section 4.2 below

...

§ 4.2.1 The Contract Sum shall be Five Million Nine Hundred Forty-Eight Thousand Dollars and Zero Cents ($ 5,948,000.00), subject to additions and deductions as provided in the Contract Documents.

...

1. N/A

PAGE 4

N/A

...

1. GC Owner Contingency	$125,000.00
2. Winter Conditions	$20,000.00
3. Additional HOP Work	$10,000.00
4. Sitework	$50,000.00
5. Unsuitable Soils/Rock	$75,000.00

...

1. Removal of Unsatisfactory Soil	Cubic Yard	$45.00
2. Rock Removal	Cubic Yard	$350.00
3. Soil Moisture Reduction, Quicklime	1% Dry Wt./Sq. Yd. at Ft Depth	$150.00
4. PennDot 2A Fill	Cubic Yard	$55.00
5. #57 Stone Fill	Cubic Yard	$65.00
6. Granular Natural Soil Fill	Cubic Yard	$55.00
7. Concrete Curbing	Linear Foot	$45.00
8. Concrete Sidewalk	25 Square Feet	$400.00

~~**§ 4.3 Cost of the Work Plus Contractor's Fee without a Guaranteed Maximum Price**~~
~~**§ 4.3.1** The Cost of the Work is as defined in Exhibit B, Determination of the Cost of the Work.~~

~~**§ 4.3.2** The Contractor's Fee:~~
~~*(State a lump sum, percentage of Cost of the Work or other provision for determining the Contractor's Fee.)*~~

Additions and Deletions Report for AIA Document A132™ – 2019. Copyright © 1975, 1980, 1992, 2009, and 2019 by The American Institute of Architects. All rights reserved. The "American Institute of Architects," "AIA," the AIA Logo, and "AIA Contract Documents" are registered trademarks and may not be used without permission. This document was produced by AIA software at 15:19:29 ET on 11/05/2021 under Order No.2581196875 which expires on 12/20/2021, is not for resale, is licensed for one-time use only, and may only be used in accordance with the AIA Contract Documents® Terms of Service. To report copyright violations, e-mail copyright@aia.org.
User Notes:

DocuSign Envelope ID: 8DBEB8AA-0E8A-4E60-958F-1F24043B8B5F

DocuSign Envelope ID: 8C8829B7-93A5-40A2-9DFD-ACDCBCE2BFC5

~~§ 4.3.3 The method of adjustment of the Contractor's Fee for changes in the Work:~~

~~§ 4.3.4 Limitations, if any, on a Subcontractor's overhead and profit for increases in the cost of its portion of the Work:~~

~~§ 4.3.5 Rental rates for Contractor-owned equipment shall not exceed __ percent (__%) of the standard rental rate paid at the place of the Project.~~

~~§ 4.3.6 Unit prices, if any:~~
~~*(Identify the item and state the unit price and quantity limitations, if any, to which the unit price will be applicable.)*~~

~~Item~~	~~Units and Limitations~~	~~Price per Unit ($0.00)~~

~~§ 4.3.7 The Contractor shall prepare and submit to the Construction Manager, within 14 days of executing this Agreement, a written Control Estimate for the Owner's review and approval. The Control Estimate shall include the items in Section B.1 of Exhibit B, Determination of the Cost of the Work.~~

~~§ 4.4 Cost of the Work Plus Contractor's Fee with a Guaranteed Maximum Price~~
~~§ 4.4.1 The Cost of the Work is as defined in Exhibit B, Determination of the Cost of the Work.~~

~~§ 4.4.2 The Contractor's Fee:~~
~~*(State a lump sum, percentage of Cost of the Work or other provision for determining the Contractor's Fee.)*~~

~~§ 4.4.3 The method of adjustment of the Contractor's Fee for changes in the Work:~~

~~§ 4.4.4 Limitations, if any, on a Subcontractor's overhead and profit for increases in the cost of its portion of the Work:~~

~~§ 4.4.5 Rental rates for Contractor-owned equipment shall not exceed __ percent (__%) of the standard rental rate paid at the place of the Project.~~

~~§ 4.4.6 Unit Prices, if any:~~
~~*(Identify the item and state the unit price and quantity limitations, if any, to which the unit price will be applicable.)*~~

~~Item~~	~~Units and Limitations~~	~~Price per Unit ($0.00)~~

~~§ 4.4.7 Guaranteed Maximum Price~~
~~§ 4.4.7.1 The Contract Sum is guaranteed by the Contractor not to exceed __ ($__), subject to additions and deductions by Change Order as provided in the Contract Documents. This maximum sum is referred to in the Contract Documents as the Guaranteed Maximum Price. Costs which would cause the Guaranteed Maximum Price to be exceeded shall be paid by the Contractor without reimbursement by the Owner.~~

~~§ 4.4.7.2 Alternates~~
~~§ 4.4.7.2.1 Alternates, if any, included in the Guaranteed Maximum Price:~~

~~Item~~	~~Price~~

~~§ 4.4.7.2.2 Subject to the conditions noted below, the following alternates may be accepted by the Owner following execution of this Agreement. Upon acceptance, the Owner shall issue a Modification to this Agreement.~~

Additions and Deletions Report for AIA Document A132™ – 2019. Copyright © 1975, 1980, 1992, 2009, and 2019 by The American Institute of Architects. All rights reserved. The "American Institute of Architects," "AIA," the AIA Logo, and "AIA Contract Documents" are registered trademarks and may not be used without permission. This document was produced by AIA software at 15:19:29 ET on 11/05/2021 under Order No.2581195875 which expires on 12/20/2021, is not for resale, is licensed for one-time use only, and may only be used in accordance with the AIA Contract Documents® Terms of Service. To report copyright violations, e-mail copyright@aia.org.
User Notes:

(1332631386)

~~*(Insert below each alternate and the conditions that must be met for the Owner to accept the alternate.)*~~

~~Item~~	~~Price~~	~~Conditions for Acceptance~~

~~§ 4.4.7.3 Allowances, if any, included in the Guaranteed Maximum Price:~~
~~*(Identify each allowance.)*~~

~~Item~~	~~Price~~

~~§ 4.4.7.4 Assumptions, if any, upon which the Guaranteed Maximum Price is based:~~
~~*(Identify each assumption.)*~~

~~§ 4.4.8 To the extent that the Contract Documents are anticipated to require further development, the Guaranteed Maximum Price includes the costs attributable to such further development consistent with the Contract Documents and reasonably inferable therefrom. Such further development does not include changes in scope, systems, kinds and quality of materials, finishes, or equipment, all of which, if required, shall be incorporated by Change Order.~~

~~§ 4.4.9 The Owner shall authorize preparation of revisions to the Contract Documents that incorporate the agreed-upon assumptions contained in Section 4.4.7.4. The Owner shall promptly furnish such revised Contract Documents to the Contractor. The Contractor shall notify the Owner and Architect of any inconsistencies between the agreed-upon assumptions contained in Section 4.4.7.4 and the revised Contract Documents.~~

~~§ 4.5 Liquidated damages, if any:~~
~~*(Insert terms and conditions for liquidated damages, if any, to be assessed in accordance with Section 3.4.)*~~

~~§ 4.6 Other:~~
~~*(Insert provisions for bonus, cost savings or other incentives, if any, that might result in a change to the Contract Sum.)*~~

...

§ 5.1.3 Provided that an Application for Payment is received by the Construction Manager not later than the 25 day of a month, the Owner shall make payment of the amount certified to the Contractor not later than the first day of the following month. If an Application for Payment is received by the Construction Manager after the application date fixed above, payment of the amount certified shall be made by the Owner not later than forty (40) days after the Construction Manager receives the Application for Payment.
PAGE 5

.1 Take that portion of the Contract Sum properly allocable to completed Work as determined by multiplying the percentage completion of each portion of the Work by the share of the total Contract Sum allocated to that portion of the Work in the schedule of values, less retainage of ten percent (10 %). Pending final determination of cost to the Owner of changes in the Work, amounts not in dispute may be included as provided in Section 7.3.9 of the General Conditions;
.2 Add that portion of the Contract Sum properly allocable to materials and equipment delivered and suitably stored at the site for subsequent incorporation in the completed construction (or, if approved in advance by the Owner, suitably stored off the site at a location agreed upon in writing), less retainage of ten percent (10 %);
.3 Subtract the aggregate of previous payments made by the Owner; and

Additions and Deletions Report for AIA Document A132™ – 2019. Copyright © 1975, 1980, 1992, 2009, and 2019 by The American Institute of Architects. All rights reserved. The "American Institute of Architects," "AIA," the AIA Logo, and "AIA Contract Documents" are registered trademarks and may not be used without permission. This document was produced by AIA software at 15:19:29 ET on 11/05/2021 under Order No.2581196875 which expires on 12/20/2021, is not for resale, is licensed for one-time use only, and may only be used in accordance with the AIA Contract Documents® Terms of Service. To report copyright violations, e-mail copyright@aia.org.
User Notes:

.4 Subtract amounts, if any, for which the Construction Manager or Architect has withheld or nullified a Certificate for Payment as provided in Section 9.5 of the General Conditions.

~~§ 5.1.4.3.1 The amount of each progress payment shall first include:~~

~~.1 That portion of the Contract Sum properly allocable to completed Work;~~

~~.2 That portion of the Contract Sum properly allocable to materials and equipment delivered and suitably stored at the site for subsequent incorporation in the completed construction, or, if approved in advance by the Owner, suitably stored off the site at a location agreed upon in writing; and~~

~~.3 That portion of Construction Change Directives that the Architect determines, in the Architect's professional judgment, to be reasonably justified.~~

~~§ 5.1.4.3.2 The amount of each progress payment shall then be reduced by:~~

~~.1 The aggregate of any amounts previously paid by the Owner;~~

~~.2 The amount, if any, for Work that remains uncorrected and for which the Architect has previously withheld a Certificate for Payment as provided in Article 9 of AIA Document A232–2019;~~

~~.3 Any amount for which the Contractor does not intend to pay a Subcontractor or material supplier, unless the Work has been performed by others the Contractor intends to pay;~~

~~.4 For Work performed or defects discovered since the last payment application, any amount for which the Architect may withhold payment, or nullify a Certificate of Payment in whole or in part, as provided in Article 9 of AIA Document A232–2019; and~~

~~.5 Retainage withheld pursuant to Section 5.1.7.~~

~~**§ 5.1.5 Progress Payments Where the Contract Sum is Based on the Cost of the Work without a Guaranteed Maximum Price**~~

~~§ 5.1.5.1 With each Application for Payment, the Contractor shall submit the cost control information required in Exhibit B, Determination of the Cost of the Work, along with payrolls, petty cash accounts, receipted invoices, or invoices with check vouchers attached, and any other evidence required by the Owner, Construction Manager or Architect to demonstrate that payments already made by the Contractor on account of the Cost of the Work equal or exceed progress payments already received by the Contractor, plus payrolls for the period covered by the present Application for Payment, less that portion of the payments attributable to the Contractor's Fee.~~

~~§ 5.1.5.2 Applications for Payment shall show the Cost of the Work actually incurred by the Contractor through the end of the period covered by the Application for Payment and for which the Contractor has made or intends to make actual payment prior to the next Application for Payment.~~

~~§ 5.1.5.3 In accordance with AIA Document A232–2019 and subject to other provisions of the Contract Documents, the amount of each progress payment shall be computed as follows:~~

~~§ 5.1.5.3.1 The amount of each progress payment shall first include:~~

~~.1 The Cost of the Work as described in Exhibit B, Determination of the Cost of the Work;~~

~~.2 That portion of Construction Change Directives that the Architect determines, in the Architect's professional judgment, to be reasonably justified; and~~

~~.3 The Contractor's Fee computed upon the Cost of the Work described in the preceding Section 5.1.5.3.1.1 at the rate stated in Section 4.3.2; or if the Contractor's Fee is stated as a fixed sum in Section 4.3.2 an amount which bears the same ratio to that fixed-sum Fee as the Cost of the Work included in Section 5.1.5.3.1.1 bears to a reasonable estimate of the probable Cost of the Work upon its completion.~~

~~§ 5.1.5.3.2 The amount of each progress payment shall then be reduced by:~~

~~.1 The aggregate of any amounts previously paid by the Owner;~~

~~.2 The amount, if any, for Work that remains uncorrected and for which the Architect has previously withheld a Certificate for Payment as provided in Article 9 of AIA Document A232–2019;~~

~~.3 Any amount for which the Contractor does not intend to pay a Subcontractor or material supplier, unless the Work has been performed by others the Contractor intends to pay;~~

~~.4 For Work performed or defects discovered since the last payment application, any amount for which the Architect may withhold payment, or nullify a Certificate of Payment in whole or in part, as provided in Article 9 of AIA Document A232–2019;~~

Additions and Deletions Report for AIA Document A132™ – 2019. Copyright © 1975, 1980, 1992, 2009, and 2019 by The American Institute of Architects. All rights reserved. The "American Institute of Architects," "AIA," the AIA Logo, and "AIA Contract Documents" are registered trademarks and may not be used without permission. This document was produced by AIA software at 15:19:29 ET on 11/05/2021 under Order No.2581196875 which expires on 12/20/2021, is not for resale, is licensed for one-time use only, and may only be used in accordance with the AIA Contract Documents® Terms of Service. To report copyright violations, e-mail copyright@aia.org.
User Notes:

~~.5 The shortfall, if any, indicated by the Contractor in the documentation required by Section 5.1.5.1 to substantiate prior Applications for Payment, or resulting from errors subsequently discovered by the Owner's auditors in such documentation; and~~

~~.6 Retainage withheld pursuant to Section 5.1.7.~~

~~§ 5.1.5.4 The Owner, Construction Manager and Contractor shall agree upon a mutually acceptable procedure for review and approval of payments to Subcontractors and the percentage of retainage held on Subcontracts, and the Contractor shall execute subcontracts in accordance with those agreements.~~

~~§ 5.1.5.5 In taking action on the Contractor's Applications for Payment, the Construction Manager and Architect shall be entitled to rely on the accuracy and completeness of the information furnished by the Contractor, and such action shall not be deemed to be a representation that (1) the Construction Manager and Architect have made a detailed examination, audit or arithmetic verification of the documentation submitted in accordance with Article 5 or other supporting data; (2) that the Construction Manager and Architect have made exhaustive or continuous on-site inspections; or (3) that the Construction Manager and Architect have made examinations to ascertain how or for what purposes the Contractor has used amounts previously paid on account of the Contract. Such examinations, audits and verifications, if required by the Owner, will be performed by the Owner's auditors acting in the sole interest of the Owner.~~

~~§ 5.1.5.6 Except with the Owner's prior approval, the Contractor shall not make advance payments to suppliers for materials or equipment which have not been delivered and stored at the site.~~

~~§ 5.1.5.7 If final completion of the Work is materially delayed through no fault of the Contractor, then the Owner shall pay the Contractor any additional amounts in accordance with Article 9 of AIA Document A232-2019.~~

~~§ 5.1.6 Progress Payments Where the Contract Sum Is Based on the Cost of the Work with a Guaranteed Maximum Price~~

~~§ 5.1.6.1 With each Application for Payment, the Contractor shall submit payrolls, petty cash accounts, receipted invoices or invoices with check vouchers attached, and any other evidence required by the Owner, Construction Manager or Architect to demonstrate that payments already made by the Contractor on account of the Cost of the Work equal or exceed progress payments already received by the Contractor plus payrolls for the period covered by the present Application for Payment, less that portion of the progress payments attributable to the Contractor's Fee.~~

~~§ 5.1.6.2 Each Application for Payment shall be based on the most recent schedule of values submitted by the Contractor in accordance with the Contract Documents. The schedule of values shall allocate the entire Guaranteed Maximum Price among: (1) the various portions of the Work; (2) any contingency for costs that are included in the Guaranteed Maximum Price but not otherwise allocated to another line item or included in a Change Order; and (3) the Contractor's Fee.~~

~~§ 5.1.6.2.1 The schedule of values shall be prepared in such form, and supported by such data to substantiate its accuracy, as the Construction Manager and Architect may require. This schedule of values shall be used as a basis for reviewing the Contractor's Applications for Payment.~~

~~§ 5.1.6.2.2 The allocation of the Guaranteed Maximum Price under this Section 5.1.6.2 shall not constitute a separate guaranteed maximum price for the Cost of the Work of each individual line item in the schedule of values.~~

~~§ 5.1.6.2.3 When the Contractor allocates costs from a contingency to another line item in the schedule of values, the Contractor shall submit supporting documentation to the Architect and Construction Manager.~~

~~§ 5.1.6.3 Applications for Payment shall show the percentage of completion of each portion of the Work as of the end of the period covered by the Application for Payment. The percentage of completion shall be the lesser of (1) the percentage of that portion of the Work which has actually been completed; or (2) the percentage obtained by dividing (a) the expense that has actually been incurred by the Contractor on account of that portion of the Work and for which the Contractor has made payment or intends to make payment prior to the next Application for Payment by (b) the share of the Guaranteed Maximum Price allocated to that portion of the Work in the schedule of values.~~

Additions and Deletions Report for AIA Document A132™ – 2019. Copyright © 1975, 1980, 1992, 2009, and 2019 by The American Institute of Architects. All rights reserved. The "American Institute of Architects," "AIA," the AIA Logo, and "AIA Contract Documents" are registered trademarks and may not be used without permission. This document was produced by AIA software at 15:19:29 ET on 11/05/2021 under Order No.2581196875 which expires on 12/20/2021, is not for resale, is licensed for one-time use only, and may only be used in accordance with the AIA Contract Documents® Terms of Service. To report copyright violations, e-mail copyright@aia.org.
User Notes:

DocuSign Envelope ID: 8DBEB8AA-0E8A-4E60-958F-1F24043B8B5F

DocuSign Envelope ID: 8C8829B7-93A5-40A2-9DFD-ACDCBCE2BFC5

~~§ 5.1.6.4 In accordance with AIA Document A232–2019, and subject to other provisions of the Contract Documents, the amount of each progress payment shall be computed as follows:~~

~~§ 5.1.6.4.1 The amount of each progress payment shall first include:~~

~~.1 That portion of the Guaranteed Maximum Price properly allocable to completed Work as determined by multiplying the percentage of completion of each portion of the Work by the share of the Guaranteed Maximum Price allocated to that portion of the Work in the most recent schedule of values;~~

~~.2 That portion of the Guaranteed Maximum Price properly allocable to materials and equipment delivered and suitably stored at the site for subsequent incorporation in the completed construction or, if approved in writing in advance by the Owner, suitably stored off the site at a location agreed upon in writing;~~

~~.3 That portion of Construction Change Directives that the Architect determines, in the Architect's professional judgment, to be reasonably justified; and~~

~~.4 The Contractor's Fee, computed upon the Cost of the Work described in the preceding Sections 5.1.6.4.1.1 and 5.1.6.4.1.2 at the rate stated in Section 4.4.2 or, if the Contractor's Fee is stated as a fixed sum in that Section, an amount that bears the same ratio to that fixed-sum fee as the Cost of the Work included in Sections 5.1.6.4.1.1 and 5.1.6.4.1.2 bears to a reasonable estimate of the probable Cost of the Work upon its completion.~~

~~§ 5.1.6.4.2 The amount of each progress payment shall then be reduced by:~~

~~.1 The aggregate of any amounts previously paid by the Owner;~~

~~.2 The amount, if any, for Work that remains uncorrected and for which the Architect has previously withheld a Certificate for Payment as provided in Article 9 of AIA Document A232–2019;~~

~~.3 Any amount for which the Contractor does not intend to pay a Subcontractor or material supplier, unless the Work has been performed by others the Contractor intends to pay;~~

~~.4 For Work performed or defects discovered since the last payment application, any amount for which the Architect may withhold payment, or nullify a Certificate of Payment in whole or in part, as provided in Article 9 of AIA Document A232–2019;~~

~~.5 The shortfall, if any, indicated by the Contractor in the documentation required by Section 5.1.6.1 to substantiate prior Applications for Payment, or resulting from errors subsequently discovered by the Owner's auditors in such documentation; and~~

~~.6 Retainage withheld pursuant to Section 5.1.7.~~

~~§ 5.1.6.5 The Owner and the Contractor shall agree upon a mutually acceptable procedure for review and approval of payments to Subcontractors and the percentage of retainage held on Subcontracts, and the Contractor shall execute subcontracts in accordance with those agreements.~~

~~§ 5.1.6.6 In taking action on the Contractor's Applications for Payment, the Construction Manager and Architect shall be entitled to rely on the accuracy and completeness of the information furnished by the Contractor and such action shall not be deemed to be a representation that (1) the Construction Manager or Architect have made a detailed examination, audit, or arithmetic verification of the documentation submitted in accordance with Section 5.1.6.1 or other supporting data; (2) that the Construction Manager or Architect have made exhaustive or continuous on-site inspections; or (3) that the Construction Manager or Architect have made examinations to ascertain how or for what purposes the Contractor has used amounts previously paid on account of the Contract. Such examinations, audits, and verifications, if required by the Owner, will be performed by the Owner's auditors acting in the sole interest of the Owner.~~

~~§ 5.1.6.7 Except with the Owner's prior approval, the Contractor shall not make advance payments to suppliers for materials or equipment which have not been delivered and stored at the site.~~

~~§ 5.1.6.8 If final completion of the Work is materially delayed through no fault of the Contractor, then the Owner shall pay the Contractor any additional amounts in accordance with Article 9 of AIA Document A232–2019.~~

...

Ten Percent (10%)

Additions and Deletions Report for AIA Document A132™ – 2019. Copyright © 1975, 1980, 1992, 2009, and 2019 by The American Institute of Architects. All rights reserved. The "American Institute of Architects," "AIA," the AIA Logo, and "AIA Contract Documents" are registered trademarks and may not be used without permission. This document was produced by AIA software at 15:19:29 ET on 11/05/2021 under Order No.2581196875 which expires on 12/20/2021, is not for resale, is licensed for one-time use only, and may only be used in accordance with the AIA Contract Documents® Terms of Service. To report copyright violations, e-mail copyright@aia.org.
User Notes:

(1332631386)

DocuSign Envelope ID: 8DBEB8AA-0E8A-4E60-958F-1F24043B8B5F

DocuSign Envelope ID: 8C8829B7-93A5-40A2-9DFD-ACDCBCE2BFC5

...

N/A

...

Refer to Section 1.6.D.1.9.11.1 of the Supplemental General Conditions

PAGE 6

Refer to Section 1.6.E.1.9.11.2 of the Supplemental General Conditions

...

N/A

~~**§ 5.2.2 Final Payment Where the Contract Sum is Based on the Cost of the Work with or without a Guaranteed Maximum Price**~~

~~**§ 5.2.2.1** Final payment, constituting the entire unpaid balance of the Contract Sum, shall be made by the Owner to the Contractor when~~

~~.1 the Contractor has fully performed the Contract except for the Contractor's responsibility to correct Work as provided in Article 12 of AIA Document A232–2019, and to satisfy other requirements, if any, which extend beyond final payment;~~

~~.2 the Contractor has submitted a final accounting for the Cost of the Work, pursuant to Exhibit B, Determination of the Cost of the Work and a final Application for Payment; and~~

~~.3 a final Certificate for Payment or Project Certificate for Payment has been issued by the Architect in accordance with Exhibit B, Determination of the Cost of the Work.~~

~~**§ 5.2.2.2** The Owner's final payment to the Contractor shall be made no later than 30 days after the issuance of the final Certificate for Payment or Project Certificate for Payment, or as follows:~~

...

~~%~~ N/A

...

Tony Ganguzza, P.E., Vice President
Boyle Construction, Inc.
1209 Hausman Rd., Suite B
Allentown, PA 18104

...

For any Claim subject to, but not resolved by, mediation ~~pursuant to Article 15 of AIA Document A232–2019,~~ through the Berks County Bar Association Alternative Dispute Program, the method of binding dispute resolution shall be as follows:

...

[X] Litigation in a court of competent jurisdiction.

PAGE 7

Additions and Deletions Report for AIA Document A132™ – 2019. Copyright © 1975, 1980, 1992, 2009, and 2019 by The American Institute of Architects. All rights reserved. The "American Institute of Architects," "AIA," the AIA Logo, and "AIA Contract Documents" are registered trademarks and may not be used without permission. This document was produced by AIA software at 15:19:29 ET on 11/06/2021 under Order No.2581196875 which expires on 12/20/2021, is not for resale, is licensed for one-time use only, and may only be used in accordance with the AIA Contract Documents® Terms of Service. To report copyright violations, e-mail copyright@aia.org.
User Notes:

(1332631386)

DocuSign Envelope ID: 8DBEB8AA-0E8A-4E60-958F-1F24043B8B5F

DocuSign Envelope ID: 8C8829B7-93A5-40A2-9DFD-ACDCBCE2BFC5

N/A

...

~~§ 7.2.1.2.2 When the Contract Sum is based on the Cost of the Work with a Guaranteed Maximum Price, if the Owner terminates the Contract for cause as provided in Article 14 of AIA Document A232-2019, the amount, if any, to be paid to the Contractor under Article 14 of AIA Document A232-2019 shall not cause the Guaranteed Maximum Price to be exceeded, nor shall it exceed the amount calculated in Section 7.2.1.2.1.~~

...

0

PAGE 8

Tony Ganguzza, P.E., Vice President
Boyle Construction, Inc.
1209 Hausman Rd., Suite B
Allentown, PA 18104
Telephone: (484) 223-0726

...

James Radwanski
Perrotto Builders, Ltd.
426 Warren Street
Reading, PA 19601
Telephone Number: (610) 374-9423

...

~~**§ 8.7 Relationship of the Parties**~~
~~Where the Contract is based on the Cost of the Work plus the Contractor's Fee, with or without a Guaranteed Maximum Price, the Contractor accepts the relationship of trust and confidence established by this Agreement and covenants with the Owner to cooperate with the Architect and exercise the Contractor's skill and judgment in furthering the interests of the Owner; to furnish efficient business administration and supervision; to furnish at all times an adequate supply of workers and materials; and to perform the Work in an expeditious and economical manner consistent with the Owner's interests. The Owner agrees to furnish and approve, in a timely manner, information required by the Contractor and to make payments to the Contractor in accordance with the requirements of the Contract Documents.~~

PAGE 9

G001	Bid-Permit Drawings	July 09, 2021	

...

00 0001	Table of Contents	July 09, 2021	6

...

Addendum 1	July 29, 2021	495
Addendum 2	Aug. 13, 2021	02
Addendum 3	Aug. 19, 2021	01
Addendum 4	Aug. 20, 2021	22

Additions and Deletions Report for AIA Document A132™ – 2019. Copyright © 1975, 1980, 1992, 2009, and 2019 by The American Institute of Architects. All rights reserved. The "American Institute of Architects," "AIA," the AIA Logo, and "AIA Contract Documents" are registered trademarks and may not be used without permission. This document was produced by AIA software at 15:19:29 ET on 11/05/2021 under Order No.2581196875 which expires on 12/20/2021, is not for resale, is licensed for one-time use only, and may only be used in accordance with the AIA Contract Documents® Terms of Service. To report copyright violations, e-mail copyright@aia.org.
User Notes:

(1332631386)

dn

DocuSign Envelope ID: 8DBEB8AA-0E8A-4E60-958F-1F24043B8B5F

DocuSign Envelope ID: 8C8829B7-93A5-40A2-9DFD-ACDCBCE2BFC5

Addendum 5	Aug. 25, 2021	20
Addendum 6	Aug. 30, 2021	04
Addendum 7	Aug. 30, 2021	02

1. Exhibit "A" Bid Submission Documents dated Sept. 09, 2021 attached hereto and made a part of this agreement.
2. Exhibit "B" Table of Contents attached hereto and made a part of this agreement.
3. Exhibit "C" Schedule of Values attached hereto and made a part of this agreement.
4. See Exhibit "D" Drawing Index attached hereto and made a part of this agreement.
5. See Exhibit "E" Milestone Schedule dated 7/06/21 attached hereto and made a part of this agreement.
6. See Exhibit "F" Supplementary Conditions, attached hereto and made a part of this agreement.
7. See Exhibit "G" Certificate of Insurance, attached hereto and made a part of this agreement.
8. See Exhibit "H" Payment and Performance Bonds, attached hereto and made a part of this agreement.

Additions and Deletions Report for AIA Document A132™ – 2019. Copyright © 1975, 1980, 1992, 2009, and 2019 by The American Institute of Architects. All rights reserved. The "American Institute of Architects," "AIA," the AIA Logo, and "AIA Contract Documents" are registered trademarks and may not be used without permission. This document was produced by AIA software at 15:19:29 ET on 11/05/2021 under Order No.2581196875 which expires on 12/20/2021, is not for resale, is licensed for one-time use only, and may only be used in accordance with the AIA Contract Documents® Terms of Service. To report copyright violations, e-mail copyright@aia.org.
User Notes:

(1332631386)

DocuSign Envelope ID: 8DBEB8AA-0E8A-4E60-958F-1F24043B8B5F

DocuSign Envelope ID: 8C8829B7-93A5-40A2-9DFD-ACDCBCE2BFC5

Certification of Document's Authenticity

AIA® Document D401™ – 2003

I, , hereby certify, to the best of my knowledge, information and belief, that I created the attached final document simultaneously with its associated Additions and Deletions Report and this certification at 15:19:29 ET on 11/05/2021 under Order No. 2581196875 from AIA Contract Documents software and that in preparing the attached final document I made no changes to the original text of AIA® Document A132™ – 2019, Standard Form of Agreement Between Owner and Contractor, Construction Manager as Adviser Edition, as published by the AIA in its software, other than those additions and deletions shown in the associated Additions and Deletions Report.

DocuSigned by:

Tony Ganguzza

(Signed)

Vice President

(Title)

11/5/2021 | 3:26 PM EDT

(Dated)

AIA Document D401™ – 2003. Copyright © 1992 and 2003 by The American Institute of Architects. All rights reserved. The "American Institute of Architects," "AIA," the AIA Logo, and "AIA Contract Documents" are registered trademarks and may not be used without permission. This document was produced by AIA software at 15:19:29 ET on 11/05/2021 under Order No.2581196875 which expires on 12/20/2021, is not for resale, is licensed for one-time use only, and may only be used in accordance with the AIA Contract Documents® Terms of Service. To report copyright violations, e-mail copyright@aia.org.
User Notes:
(1332631386)

DocuSign Envelope ID: 8DBEB8AA-0E8A-4E60-958F-1F24043B8B5F

DocuSign Envelope ID: 8C8829B7-93A5-40A2-9DFD-ACDCBCE2BFC5

Exhibit "A"

DocuSign Envelope ID: 8DBEB8AA-0E8A-4E60-958F-1F24043B8B5F

DocuSign Envelope ID: 8C8829B7-93A5-40A2-9DFD-ACDCBCE2BFC5

SECTION 00 4116 - BID FORM - STIPULATED SUM (MULTIPLE-PRIME CONTRACT)

1.1 BID INFORMATION

A. Bidder: Perrotto Builders, Ltd.

B. Bid Package (Prime Contract Package): General Construction.

C. Project Name: Reading Fire Department, 9th & Marion Fire Station.

D. Project Location: 1201 North 9th Street, Reading, PA, 19604.

E. Owner: City of Reading.

F. Architect: Manns Woodward Studios Inc.

G. Architect Project Number: 20-088.

1.2 CERTIFICATIONS AND BASE BID

A. Base Bid, Multi-Prime Contract: The undersigned Bidder, having carefully examined the Procurement and Contracting Requirements, Conditions of the Contract, Drawings, Specifications, and all subsequent Addenda, as issued by The City of Reading, having vistied the site, and being familiar with all conditions and requirements of the Work, hereby agrees to furnish all material, labor, equipment and services, including all schedule allowances, necessary to complete the portion of construction required by the identified Bid Package (Prime Contract Package) of the above named project, according to the requirements of the Procurement and Contracting Documents, for the stipulated sum of:

1. Text: Five million nine hundred forty-eight thousand Dollars
2. Numeric Value of Text above: $5,948,000.00.
3. Bid Package (Prime Contract Package): General Construction

DocuSign Envelope ID: 8DBEB8AA-0E8A-4E60-958F-1F24043B8B5F

DocuSign Envelope ID: 8C8829B7-93A5-40A2-9DFD-ACDCBCE2BFC5

1.3 BID GUARANTEE

A. The undersigned Bidder agrees to execute a contract for this Work in the above amount and to furnish surety as specified within 10 days after a written Notice of Award, if offered within 90 days after receipt of bids, and on failure to do so agrees to forfeit to Owner the attached cash, cashier's check, certified check, U.S. money order, or bid bond, as liquidated damages for such failure, in the following amount constituting ten percent (10%) of the Base Bid amount above:

1. Bid Bond in the amount of ten percent total amount bid Dollars ($ 10%).

1.4 SUBCONTRACTORS AND SUPPLIERS

A. Contractor shall provide via attachment to the bid forms, the names of subcontractors and suppliers performing work or providing materials/equipment exceeding, by monetary value, 5% of the Bid price.

1.5 TIME OF COMPLETION

A. The undersigned Bidder proposes and agrees hereby to commence the Work of the Contract Documents on a date specified in written Notice to Proceed to be issued by the City of Reading through the Construction Manager, and shall be fully complete within the duration provided within the Preliminary Milestone Schedule provided within Section 00 3113 "Preliminary Schedule".

1.6 ACKNOWLEDGEMENT OF ADDENDA

A. The undersigned Bidder acknowledges receipt of and use of the following Addenda in the preparation of this Bid:

1. Addendum No. 1, dated 7/29/21.
2. Addendum No. 2, dated 8/13/21.
3. Addendum No. 3, dated 8/19/21.
4. Addendum No. 4, dated 8/20/21.
5. Addendum No. 5, dated 8/25/21.
6. Addendum No. 6, dated 8/30/21.
7. Addendum No. 7, dated 8/30/21.

DocuSign Envelope ID: 8DBEB8AA-0E8A-4E60-958F-1F24043B8B5F

DocuSign Envelope ID: 3A2F929D-5AE0-408A-902C-8DE0E5A32CE9

§ 10 The Surety shall not be liable to the Owner, Claimants or others for obligations of the Contractor that are unrelated to the Construction Contract. The Owner shall not be liable for the payment of any costs or expenses of any Claimant under this Bond, and shall have under this Bond no obligation to make payments to, or give notice on behalf of, Claimants or otherwise have any obligations to Claimants under this Bond.

§ 11 The Surety hereby waives notice of any change, including changes of time, to the Construction Contract or to related subcontracts, purchase orders and other obligations.

§ 12 No suit or action shall be commenced by a Claimant under this Bond other than in a court of competent jurisdiction in the state in which the project that is the subject of the Construction Contract is located or after the expiration of one year from the date (1) on which the Claimant sent a Claim to the Surety pursuant to Section 5.1.2 or 5.2, or (2) on which the last labor or service was performed by anyone or the last materials or equipment were furnished by anyone under the Construction Contract, whichever of (1) or (2) first occurs. If the provisions of this Paragraph are void or prohibited by law, the minimum period of limitation available to sureties as a defense in the jurisdiction of the suit shall be applicable.

§ 13 Notice and Claims to the Surety, the Owner or the Contractor shall be mailed or delivered to the address shown on the page on which their signature appears. Actual receipt of notice or Claims, however accomplished, shall be sufficient compliance as of the date received.

§ 14 When this Bond has been furnished to comply with a statutory or other legal requirement in the location where the construction was to be performed, any provision in this Bond conflicting with said statutory or legal requirement shall be deemed deleted herefrom and provisions conforming to such statutory or other legal requirement shall be deemed incorporated herein. When so furnished, the intent is that this Bond shall be construed as a statutory bond and not as a common law bond.

§ 15 Upon request by any person or entity appearing to be a potential beneficiary of this Bond, the Contractor and Owner shall promptly furnish a copy of this Bond or shall permit a copy to be made.

§ 16 Definitions

§ 16.1 Claim. A written statement by the Claimant including at a minimum:

- .1 the name of the Claimant;
- .2 the name of the person for whom the labor was done, or materials or equipment furnished;
- .3 a copy of the agreement or purchase order pursuant to which labor, materials or equipment was furnished for use in the performance of the Construction Contract;
- .4 a brief description of the labor, materials or equipment furnished;
- .5 the date on which the Claimant last performed labor or last furnished materials or equipment for use in the performance of the Construction Contract;
- .6 the total amount earned by the Claimant for labor, materials or equipment furnished as of the date of the Claim;
- .7 the total amount of previous payments received by the Claimant; and
- .8 the total amount due and unpaid to the Claimant for labor, materials or equipment furnished as of the date of the Claim.

§ 16.2 Claimant. An individual or entity having a direct contract with the Contractor or with a subcontractor of the Contractor to furnish labor, materials or equipment for use in the performance of the Construction Contract. The term Claimant also includes any individual or entity that has rightfully asserted a claim under an applicable mechanic's lien or similar statute against the real property upon which the Project is located. The intent of this Bond shall be to include without limitation in the terms "labor, materials or equipment" that part of water, gas, power, light, heat, oil, gasoline, telephone service or rental equipment used in the Construction Contract, architectural and engineering services required for performance of the work of the Contractor and the Contractor's subcontractors, and all other items for which a mechanic's lien may be asserted in the jurisdiction where the labor, materials or equipment were furnished.

§ 16.3 Construction Contract. The agreement between the Owner and Contractor identified on the cover page, including all Contract Documents and all changes made to the agreement and the Contract Documents.

DocuSign Envelope ID: 8DBEB8AA-0E8A-4E60-958F-1F24043B8B5F

DocuSign Envelope ID: 3A2F929D-5AE0-408A-902C-8DE0E5A32CE9

§ 16.4 Owner Default. Failure of the Owner, which has not been remedied or waived, to pay the Contractor as required under the Construction Contract or to perform and complete or comply with the other material terms of the Construction Contract.

§ 16.5 Contract Documents. All the documents that comprise the agreement between the Owner and Contractor.

§ 17 If this Bond is issued for an agreement between a Contractor and subcontractor, the term Contractor in this Bond shall be deemed to be Subcontractor and the term Owner shall be deemed to be Contractor.

§ 18 Modifications to this bond are as follows: None

(Space is provided below for additional signatures of added parties, other than those appearing on the cover page.)

CONTRACTOR AS PRINCIPAL		**SURETY**	
Company:	*(Corporate Seal)*	Company:	*(Corporate Seal)*
Signature:		Signature:	
Name and Title:		Name and Title:	
Address:		Address:	

AIA Document A312™ – 2010 Payment Bond. The American Institute of Architects. All rights reserved. WARNING: This AIA® Document is protected by U.S. Copyright Law and International Treaties. Unauthorized reproduction or distribution of this AIA® Document, or any portion of it, may result in severe civil and criminal penalties, and will be prosecuted to the maximum extent possible under the law. This document was produced by AIA software at 11:43:03 on 10/09/2012 under Order No.5820952305_1 which expires on 04/13/2013, and is not for resale.
User Notes: (1718866249)

DocuSign Envelope ID: 8DBEB8AA-0E8A-4E60-958F-1F24043B8B5F

DocuSign Envelope ID: 3A2F929D-5AE0-408A-902C-8DE0E5A32CE9

TRAVELERS

Travelers Casualty and Surety Company of America
Travelers Casualty and Surety Company
St. Paul Fire and Marine Insurance Company

POWER OF ATTORNEY

KNOW ALL MEN BY THESE PRESENTS: That Travelers Casualty and Surety Company of America, Travelers Casualty and Surety Company, and St. Paul Fire and Marine Insurance Company are corporations duly organized under the laws of the State of Connecticut (herein collectively called the "Companies"), and that the Companies do hereby make, constitute and appoint **BENJAMIN R PINKERTON** of **LANCASTER**, **Pennsylvania**, their true and lawful Attorney(s)-in-Fact to sign, execute, seal and acknowledge any and all bonds, recognizances, conditional undertakings and other writings obligatory in the nature thereof on behalf of the Companies in their business of guaranteeing the fidelity of persons, guaranteeing the performance of contracts and executing or guaranteeing bonds and undertakings required or permitted in any actions or proceedings allowed by law.

IN WITNESS WHEREOF, the Companies have caused this instrument to be signed, and their corporate seals to be hereto affixed, this **21st** day of **April, 2021.**

State of Connecticut

City of Hartford ss.

By: _____
Robert L. Raney, Senior Vice President

On this the **21st** day of **April, 2021,** before me personally appeared **Robert L. Raney,** who acknowledged himself to be the Senior Vice President of each of the Companies, and that he, as such, being authorized so to do, executed the foregoing instrument for the purposes therein contained by signing on behalf of said Companies by himself as a duly authorized officer.

IN WITNESS WHEREOF, I hereunto set my hand and official seal.

My Commission expires the **30th** day of **June, 2026**

_____
Anna P. Nowik, Notary Public

This Power of Attorney is granted under and by the authority of the following resolutions adopted by the Boards of Directors of each of the Companies, which resolutions are now in full force and effect, reading as follows:

RESOLVED, that the Chairman, the President, any Vice Chairman, any Executive Vice President, any Senior Vice President, any Vice President, any Second Vice President, the Treasurer, any Assistant Treasurer, the Corporate Secretary or any Assistant Secretary may appoint Attorneys-in-Fact and Agents to act for and on behalf of the Company and may give such appointee such authority as his or her certificate of authority may prescribe to sign with the Company's name and seal with the Company's seal bonds, recognizances, contracts of indemnity, and other writings obligatory in the nature of a bond, recognizance, or conditional undertaking, and any of said officers or the Board of Directors at any time may remove any such appointee and revoke the power given him or her; and it is

FURTHER RESOLVED, that the Chairman, the President, any Vice Chairman, any Executive Vice President, any Senior Vice President or any Vice President may delegate all or any part of the foregoing authority to one or more officers or employees of this Company, provided that each such delegation is in writing and a copy thereof is filed in the office of the Secretary; and it is

FURTHER RESOLVED, that any bond, recognizance, contract of indemnity, or writing obligatory in the nature of a bond, recognizance, or conditional undertaking shall be valid and binding upon the Company when (a) signed by the President, any Vice Chairman, any Executive Vice President, any Senior Vice President or any Vice President, any Second Vice President, the Treasurer, any Assistant Treasurer, the Corporate Secretary or any Assistant Secretary and duly attested and sealed with the Company's seal by a Secretary or Assistant Secretary; or (b) duly executed (under seal, if required) by one or more Attorneys-in-Fact and Agents pursuant to the power prescribed in his or her certificate or their certificates of authority or by one or more Company officers pursuant to a written delegation of authority; and it is

FURTHER RESOLVED, that the signature of each of the following officers: President, any Executive Vice President, any Senior Vice President, any Vice President, any Assistant Vice President, any Secretary, any Assistant Secretary, and the seal of the Company may be affixed by facsimile to any Power of Attorney or to any certificate relating thereto appointing Resident Vice Presidents, Resident Assistant Secretaries or Attorneys-in-Fact for purposes only of executing and attesting bonds and undertakings and other writings obligatory in the nature thereof, and any such Power of Attorney or certificate bearing such facsimile signature or facsimile seal shall be valid and binding upon the Company and any such power so executed and certified by such facsimile signature and facsimile seal shall be valid and binding on the Company in the future with respect to any bond or understanding to which it is attached.

I, **Kevin E. Hughes,** the undersigned, Assistant Secretary of each of the Companies, do hereby certify that the above and foregoing is a true and correct copy of the Power of Attorney executed by said Companies, which remains in full force and effect.

Dated this **29th** day of **September**, **2021**.

_____
Kevin E. Hughes, Assistant Secretary

To verify the authenticity of this Power of Attorney, please call us at 1-800-421-3880.
Please refer to the above-named Attorney(s)-in-Fact and the details of the bond to which this Power of Attorney is attached.

DocuSign Envelope ID: 8DBEB8AA-0E8A-4E60-958F-1F24043B8B5F

DocuSign Envelope ID: 3A2F929D-5AE0-408A-902C-8DE0E5A32CE9

RECEIVED
OCT 01 2021
By

Bond No. 107481796

AIA® Document A312™ – 2010

Performance Bond

CONTRACTOR:
(Name, legal status and address)
Perrotto Builders, Ltd.
426 Warren Street
Reading, PA 19601-1611

SURETY:
(Name, legal status and principal place of business)
Travelers Casualty and Surety Company of America
ONE TOWER SQUARE, HARTFORD, CT 06183

OWNER:
(Name, legal status and address)
The City of Reading
815 Washington Street
Reading, PA 19601

CONSTRUCTION CONTRACT
Date: September 28th, 2021
Amount: $ five million nine hundred forty eight hundred thousand and 00/100 ($5,948,000)
Description:
(Name and location)
9th & Marion Fire Station - General Construction

BCI Project #2010 52

BOND
Date: September 29th, 2021
(Not earlier than Construction Contract Date)

Amount: $five million nine hundred forty eight hundred thousand and 00/100 ($5,948,000)
Modifications to this Bond: [x] None [ ] See Section 16

CONTRACTOR AS PRINCIPAL
Company: *(Corporate Seal)*
Perrotto Builders, Ltd.

Signature:
Name and Title: James P. Kodwanski
Owner

SURETY
Company: *(Corporate Seal)*
Travelers Casualty and Surety Company of America

Signature:
Name and Title: Benjamin R. Pinkerton, Attorney-in-fact

(Any additional signatures appear on the last page of this Performance Bond.)

(FOR INFORMATION ONLY — Name, address and telephone)

AGENT or BROKER:

Engle-Hambright & Davies, Inc.
P.O. Box 11600
Lancaster, PA 17605
(717) 394-5681

OWNER'S REPRESENTATIVE:
(Architect, Engineer or other party:)

ADDITIONS AND DELETIONS:
The author of this document has added information needed for its completion. The author may also have revised the text of the original AIA standard form. An *Additions and Deletions Report* that notes added information as well as revisions to the standard form text is available from the author and should be reviewed. A vertical line in the left margin of this document indicates where the author has added necessary information and where the author has added to or deleted from the original AIA text.

This document has important legal consequences. Consultation with an attorney is encouraged with respect to its completion or modification.

Any singular reference to Contractor, Surety, Owner or other party shall be considered plural where applicable.

Init.

AIA Document A312™ – 2010 Performance Bond. The American Institute of Architects. All rights reserved. WARNING: This AIA® Document is protected by U.S. Copyright Law and International Treaties. Unauthorized reproduction or distribution of this AIA® Document, or any portion of it, may result in severe civil and criminal penalties, and will be prosecuted to the maximum extent possible under the law. This document was produced by AIA software at 11:49:30 on 10/09/2012 under Order No.5820952305_1 which expires on 06/13/2013, and is not for resale.
User Notes: (1750432116)

DocuSign Envelope ID: 8DBEB8AA-0E8A-4E60-958F-1F24043B8B5F

DocuSign Envelope ID: 3A2F929D-5AE0-408A-902C-8DE0E5A32CE9

§ 1 The Contractor and Surety, jointly and severally, bind themselves, their heirs, executors, administrators, successors and assigns to the Owner for the performance of the Construction Contract, which is incorporated herein by reference.

§ 2 If the Contractor performs the Construction Contract, the Surety and the Contractor shall have no obligation under this Bond, except when applicable to participate in a conference as provided in Section 3.

§ 3 If there is no Owner Default under the Construction Contract, the Surety's obligation under this Bond shall arise after

.1 the Owner first provides notice to the Contractor and the Surety that the Owner is considering declaring a Contractor Default. Such notice shall indicate whether the Owner is requesting a conference among the Owner, Contractor and Surety to discuss the Contractor's performance. If the Owner does not request a conference, the Surety may, within five (5) business days after receipt of the Owner's notice, request such a conference. If the Surety timely requests a conference, the Owner shall attend. Unless the Owner agrees otherwise, any conference requested under this Section 3.1 shall be held within ten (10) business days of the Surety's receipt of the Owner's notice. If the Owner, the Contractor and the Surety agree, the Contractor shall be allowed a reasonable time to perform the Construction Contract, but such an agreement shall not waive the Owner's right, if any, subsequently to declare a Contractor Default;

.2 the Owner declares a Contractor Default, terminates the Construction Contract and notifies the Surety; and

.3 the Owner has agreed to pay the Balance of the Contract Price in accordance with the terms of the Construction Contract to the Surety or to a contractor selected to perform the Construction Contract.

§ 4 Failure on the part of the Owner to comply with the notice requirement in Section 3.1 shall not constitute a failure to comply with a condition precedent to the Surety's obligations, or release the Surety from its obligations, except to the extent the Surety demonstrates actual prejudice.

§ 5 When the Owner has satisfied the conditions of Section 3, the Surety shall promptly and at the Surety's expense take one of the following actions:

§ 5.1 Arrange for the Contractor, with the consent of the Owner, to perform and complete the Construction Contract;

§ 5.2 Undertake to perform and complete the Construction Contract itself, through its agents or independent contractors;

§ 5.3 Obtain bids or negotiated proposals from qualified contractors acceptable to the Owner for a contract for performance and completion of the Construction Contract, arrange for a contract to be prepared for execution by the Owner and a contractor selected with the Owner's concurrence, to be secured with performance and payment bonds executed by a qualified surety equivalent to the bonds issued on the Construction Contract, and pay to the Owner the amount of damages as described in Section 7 in excess of the Balance of the Contract Price incurred by the Owner as a result of the Contractor Default; or

§ 5.4 Waive its right to perform and complete, arrange for completion, or obtain a new contractor and with reasonable promptness under the circumstances:

.1 After investigation, determine the amount for which it may be liable to the Owner and, as soon as practicable after the amount is determined, make payment to the Owner; or

.2 Deny liability in whole or in part and notify the Owner, citing the reasons for denial.

§ 6 If the Surety does not proceed as provided in Section 5 with reasonable promptness, the Surety shall be deemed to be in default on this Bond seven days after receipt of an additional written notice from the Owner to the Surety demanding that the Surety perform its obligations under this Bond, and the Owner shall be entitled to enforce any remedy available to the Owner. If the Surety proceeds as provided in Section 5.4, and the Owner refuses the payment or the Surety has denied liability, in whole or in part, without further notice the Owner shall be entitled to enforce any remedy available to the Owner.

DocuSign Envelope ID: 8DBEB8AA-0E8A-4E60-958F-1F24043B8B5F

DocuSign Envelope ID: 3A2F929D-5AE0-408A-902C-8DE0E5A32CE9

§ 7 If the Surety elects to act under Section 5.1, 5.2 or 5.3, then the responsibilities of the Surety to the Owner shall not be greater than those of the Contractor under the Construction Contract, and the responsibilities of the Owner to the Surety shall not be greater than those of the Owner under the Construction Contract. Subject to the commitment by the Owner to pay the Balance of the Contract Price, the Surety is obligated, without duplication, for

.1 the responsibilities of the Contractor for correction of defective work and completion of the Construction Contract;

.2 additional legal, design professional and delay costs resulting from the Contractor's Default, and resulting from the actions or failure to act of the Surety under Section 5; and

.3 liquidated damages, or if no liquidated damages are specified in the Construction Contract, actual damages caused by delayed performance or non-performance of the Contractor.

§ 8 If the Surety elects to act under Section 5.1, 5.3 or 5.4, the Surety's liability is limited to the amount of this Bond.

§ 9 The Surety shall not be liable to the Owner or others for obligations of the Contractor that are unrelated to the Construction Contract, and the Balance of the Contract Price shall not be reduced or set off on account of any such unrelated obligations. No right of action shall accrue on this Bond to any person or entity other than the Owner or its heirs, executors, administrators, successors and assigns.

§ 10 The Surety hereby waives notice of any change, including changes of time, to the Construction Contract or to related subcontracts, purchase orders and other obligations.

§ 11 Any proceeding, legal or equitable, under this Bond may be instituted in any court of competent jurisdiction in the location in which the work or part of the work is located and shall be instituted within two years after a declaration of Contractor Default or within two years after the Contractor ceased working or within two years after the Surety refuses or fails to perform its obligations under this Bond, whichever occurs first. If the provisions of this Paragraph are void or prohibited by law, the minimum period of limitation available to sureties as a defense in the jurisdiction of the suit shall be applicable.

§ 12 Notice to the Surety, the Owner or the Contractor shall be mailed or delivered to the address shown on the page on which their signature appears.

§ 13 When this Bond has been furnished to comply with a statutory or other legal requirement in the location where the construction was to be performed, any provision in this Bond conflicting with said statutory or legal requirement shall be deemed deleted herefrom and provisions conforming to such statutory or other legal requirement shall be deemed incorporated herein. When so furnished, the intent is that this Bond shall be construed as a statutory bond and not as a common law bond.

§ 14 Definitions

§ 14.1 Balance of the Contract Price. The total amount payable by the Owner to the Contractor under the Construction Contract after all proper adjustments have been made, including allowance to the Contractor of any amounts received or to be received by the Owner in settlement of insurance or other claims for damages to which the Contractor is entitled, reduced by all valid and proper payments made to or on behalf of the Contractor under the Construction Contract.

§ 14.2 Construction Contract. The agreement between the Owner and Contractor identified on the cover page, including all Contract Documents and changes made to the agreement and the Contract Documents.

§ 14.3 Contractor Default. Failure of the Contractor, which has not been remedied or waived, to perform or otherwise to comply with a material term of the Construction Contract.

§ 14.4 Owner Default. Failure of the Owner, which has not been remedied or waived, to pay the Contractor as required under the Construction Contract or to perform and complete or comply with the other material terms of the Construction Contract.

§ 14.5 Contract Documents. All the documents that comprise the agreement between the Owner and Contractor.

AIA Document A312™ – 2010 Performance Bond. The American Institute of Architects. All rights reserved. WARNING: This AIA® Document is protected by U.S. Copyright Law and International Treaties. Unauthorized reproduction or distribution of this AIA® Document, or any portion of it, may result in severe civil and criminal penalties, and will be prosecuted to the maximum extent possible under the law. This document was produced by AIA software at 11:49:30 on 10/09/2012 under Order No.5820952305_1 which expires on 04/13/2013, and is not for resale.
User Notes:

(1750432116)

DocuSign Envelope ID: 8DBEB8AA-0E8A-4E60-958F-1F24043B8B5F

DocuSign Envelope ID: 3A2F929D-5AE0-408A-902C-8DE0E5A32CE9

§ 15 If this Bond is issued for an agreement between a Contractor and subcontractor, the term Contractor in this Bond shall be deemed to be Subcontractor and the term Owner shall be deemed to be Contractor.

§ 16 Modifications to this bond are as follows: None

(Space is provided below for additional signatures of added parties, other than those appearing on the cover page.)

CONTRACTOR AS PRINCIPAL		**SURETY**	
Company:	*(Corporate Seal)*	Company:	*(Corporate Seal)*
Signature:		Signature:	
Name and Title:		Name and Title:	
Address:		Address:	

AIA Document A312™ – 2010 Performance Bond. The American Institute of Architects. All rights reserved. WARNING: This AIA® Document is protected by U.S. Copyright Law and International Treaties. Unauthorized reproduction or distribution of this AIA® Document, or any portion of it, may result in severe civil and criminal penalties, and will be prosecuted to the maximum extent possible under the law. This document was produced by AIA software at 11:49:30 on 10/09/2012 under Order No.5820952305_1 which expires on 04/13/2013, and is not for resale.
User Notes: (1750432116)

DocuSign Envelope ID: 8DBEB8AA-0E8A-4E60-958F-1F24043B8B5F

DocuSign Envelope ID: 3A2F929D-5AE0-408A-902C-8DE0E5A32CE9

TRAVELERS

Travelers Casualty and Surety Company of America
Travelers Casualty and Surety Company
St. Paul Fire and Marine Insurance Company

POWER OF ATTORNEY

KNOW ALL MEN BY THESE PRESENTS: That Travelers Casualty and Surety Company of America, Travelers Casualty and Surety Company, and St. Paul Fire and Marine Insurance Company are corporations duly organized under the laws of the State of Connecticut (herein collectively called the "Companies"), and that the Companies do hereby make, constitute and appoint **BENJAMIN R PINKERTON** of **LANCASTER**, **Pennsylvania**, their true and lawful Attorney(s)-in-Fact to sign, execute, seal and acknowledge any and all bonds, recognizances, conditional undertakings and other writings obligatory in the nature thereof on behalf of the Companies in their business of guaranteeing the fidelity of persons, guaranteeing the performance of contracts and executing or guaranteeing bonds and undertakings required or permitted in any actions or proceedings allowed by law.

IN WITNESS WHEREOF, the Companies have caused this instrument to be signed, and their corporate seals to be hereto affixed, this **21st** day of **April, 2021.**

State of Connecticut

City of Hartford ss.

By: _____
Robert L. Raney, Senior Vice President

On this the **21st** day of **April, 2021**, before me personally appeared **Robert L. Raney**, who acknowledged himself to be the Senior Vice President of each of the Companies, and that he, as such, being authorized so to do, executed the foregoing instrument for the purposes therein contained by signing on behalf of said Companies by himself as a duly authorized officer.

IN WITNESS WHEREOF, I hereunto set my hand and official seal.

My Commission expires the **30th** day of **June, 2026**

_____
Anna P. Nowik, Notary Public

This Power of Attorney is granted under and by the authority of the following resolutions adopted by the Boards of Directors of each of the Companies, which resolutions are now in full force and effect, reading as follows:

RESOLVED, that the Chairman, the President, any Vice Chairman, any Executive Vice President, any Senior Vice President, any Vice President, any Second Vice President, the Treasurer, any Assistant Treasurer, the Corporate Secretary or any Assistant Secretary may appoint Attorneys-in-Fact and Agents to act for and on behalf of the Company and may give such appointee such authority as his or her certificate of authority may prescribe to sign with the Company's name and seal with the Company's seal bonds, recognizances, contracts of indemnity, and other writings obligatory in the nature of a bond, recognizance, or conditional undertaking, and any of said officers or the Board of Directors at any time may remove any such appointee and revoke the power given him or her; and it is

FURTHER RESOLVED, that the Chairman, the President, any Vice Chairman, any Executive Vice President, any Senior Vice President or any Vice President may delegate all or any part of the foregoing authority to one or more officers or employees of this Company, provided that each such delegation is in writing and a copy thereof is filed in the office of the Secretary; and it is

FURTHER RESOLVED, that any bond, recognizance, contract of indemnity, or writing obligatory in the nature of a bond, recognizance, or conditional undertaking shall be valid and binding upon the Company when (a) signed by the President, any Vice Chairman, any Executive Vice President, any Senior Vice President or any Vice President, any Second Vice President, the Treasurer, any Assistant Treasurer, the Corporate Secretary or any Assistant Secretary and duly attested and sealed with the Company's seal by a Secretary or Assistant Secretary; or (b) duly executed (under seal, if required) by one or more Attorneys-in-Fact and Agents pursuant to the power prescribed in his or her certificate or their certificates of authority or by one or more Company officers pursuant to a written delegation of authority; and it is

FURTHER RESOLVED, that the signature of each of the following officers: President, any Executive Vice President, any Senior Vice President, any Vice President, any Assistant Vice President, any Secretary, any Assistant Secretary, and the seal of the Company may be affixed by facsimile to any Power of Attorney or to any certificate relating thereto appointing Resident Vice Presidents, Resident Assistant Secretaries or Attorneys-in-Fact for purposes only of executing and attesting bonds and undertakings and other writings obligatory in the nature thereof, and any such Power of Attorney or certificate bearing such facsimile signature or facsimile seal shall be valid and binding upon the Company and any such power so executed and certified by such facsimile signature and facsimile seal shall be valid and binding on the Company in the future with respect to any bond or understanding to which it is attached.

I, **Kevin E. Hughes**, the undersigned, Assistant Secretary of each of the Companies, do hereby certify that the above and foregoing is a true and correct copy of the Power of Attorney executed by said Companies, which remains in full force and effect.

Dated this **29th** day of **September**, **2021**.

_____
Kevin E. Hughes, Assistant Secretary

To verify the authenticity of this Power of Attorney, please call us at 1-800-421-3880.
Please refer to the above-named Attorney(s)-in-Fact and the details of the bond to which this Power of Attorney is attached.

DocuSign

Certificate Of Completion

Envelope Id: 3A2F929D5AE0408A902C8DE0E5A32CE9
Status: Completed
Subject: 2010 52 - Perrotto - General Construction
Source Envelope:
Document Pages: 150
Signatures: 1
Certificate Pages: 1
Initials: 0
AutoNav: Enabled
EnvelopeId Stamping: Enabled
Time Zone: (UTC-05:00) Eastern Time (US & Canada)

Envelope Originator:
Robert Sabol
rsabol@boyleconstruction.com
IP Address: 216.164.169.205

Record Tracking

Status: Original
10/25/2021 4:46:08 PM

Holder: Robert Sabol
rsabol@boyleconstruction.com

Location: DocuSign

Signer Events	Signature	Timestamp
Tony Ganguzza tganguzza@boyleconstruction.com Vice President Boyle Construction Security Level: Email, Account Authentication (None)	DocuSigned by: Tony Ganguzza 292D29914D83484... Signature Adoption: Pre-selected Style Using IP Address: 216.164.169.205	Sent: 10/25/2021 4:51:30 PM Viewed: 10/25/2021 5:36:55 PM Signed: 10/26/2021 8:16:29 AM

Electronic Record and Signature Disclosure:
Not Offered via DocuSign

In Person Signer Events	Signature	Timestamp

Editor Delivery Events	Status	Timestamp

Agent Delivery Events	Status	Timestamp

Intermediary Delivery Events	Status	Timestamp

Certified Delivery Events	Status	Timestamp

Carbon Copy Events	Status	Timestamp

Witness Events	Signature	Timestamp

Notary Events	Signature	Timestamp

Envelope Summary Events	Status	Timestamps
Envelope Sent	Hashed/Encrypted	10/25/2021 4:51:30 PM
Certified Delivered	Security Checked	10/25/2021 5:36:55 PM
Signing Complete	Security Checked	10/26/2021 8:16:29 AM
Completed	Security Checked	10/26/2021 8:16:29 AM

Payment Events	Status	Timestamps

DocuSign Envelope ID: 8DBEB8AA-0E8A-4E60-958F-1F24043B8B5F

DocuSign Envelope ID: 8C8829B7-93A5-40A2-9DFD-ACDCBCE2BFC5

8. Addendum No. 8, dated _____.
9. Addendum No. 9, dated _____.
10. Addendum No. 10, dated _____.

1.7 BID SUPPLEMENTS

A. The following supplements are a part of this Bid Form and are attached hereto or included by reference.

1. Bid Form Supplement - Alternates.
2. Bid Form Supplement - Unit Prices.
3. Bid Form Supplement - Allowances.
4. Bid Form Supplement - Bid Bond Form (AIA Document A310-2010).
5. Bid Form Supplement - Contractor's Qualification Statement (AIA Document A305-2020).
6. Non-Collusion Affidavit
7. Provider's Certificate of Non-Indebtedness to the City of Reading
8. Resolution No. 192-92; Statement Regarding Manufacture of Cement
9. Contractor's Statement for Public Disclosure

1.8 CONTRACTOR'S LICENSE

A. The undersigned further states that it is a duly licensed contractor, for the type of work proposed, in the state and local jurisdiction of the project, and that all fees, permits, etc., pursuant to submitting this proposal have been paid in full.

1.9 SUBMISSION OF BID

A. Respectfully submitted this 9 day of Sept., 2021.

B. Submitted By: Perrotto Builders, Ltd. (Name of bidding firm or corporation).

C. Authorized Signature: _____ (Handwritten signature).

D. Signed By: James P. Radwanski (Type or print name).

E. Title: Owner/President (Owner/Partner/President/Vice President).

DocuSign Envelope ID: 8DBEB8AA-0E8A-4E60-958F-1F24043B8B5F

DocuSign Envelope ID: 8C8829B7-93A5-40A2-9DFD-ACDCBCE2BFC5

F. Witness By: Francine D Norris (Handwritten signature).
Francine D Norris

G. Attest: (Handwritten signature).

H. By: James P. Radwanski (Type or print name).

I. Title: Corporate Secretary (Corporate Secretary or Assistant Secretary).

J. Street Address: 426 Warren Street.

K. City, State, Zip: Reading, PA 19601.

L. Phone: 610-374-9421.

M. License No.: C00003600.

N. Federal ID No.: 23-2160257 (Affix Corporate Seal Here).

END OF DOCUMENT 004116

DocuSign Envelope ID: 8DBEB8AA-0E8A-4E60-958F-1F24043B8B5F

DocuSign Envelope ID: 8C8829B7-93A5-40A2-9DFD-ACDCBCE2BFC5

SECTION 00 4321 - ALLOWANCE FORM

1.1 BID INFORMATION

A. Bidder: Perrotto Builders, Ltd.

B. Bid Package (Prime Contract Package): General Construction.

C. Project Name: READING FIRE STATION.

D. Project Location: 1201 North 9th Street, Reading, PA, 19604.

E. Owner: The City of Reading.

F. Architect: Manns Woodward Studios, Inc..

G. Architect Project Number: 20-088.

H. Construction Manager: Boyle Construction, Inc..

1.2 BID FORM SUPPLEMENT

A. This form is required to be attached to the Bid Form.

B. The undersigned Bidder certifies that Base Bid submission to which this Bid Supplement is attached includes those allowances described in the Contract Documents and scheduled in Section 01 2100 "Allowances."

1.3 SUBMISSION OF BID SUPPLEMENT

A. Respectfully submitted this 9 day of Sept., 2021.

B. Submitted By: Perrotto Builders, Ltd. (Insert name of bidding firm or corporation).

C. Authorized Signature: _____ (Handwritten signature).

D. Signed By: James P. Radwanski (Type or print name).

DocuSign Envelope ID: 8DBEB8AA-0E8A-4E60-958F-1F24043B8B5F

DocuSign Envelope ID: 8C8829B7-93A5-40A2-9DFD-ACDCBCE2BFC5

E. Title: Owner/President (Owner/Partner/President/Vice President).

END OF DOCUMENT 004321

DocuSign Envelope ID: 8DBEB8AA-0E8A-4E60-958F-1F24043B8B5F

DocuSign Envelope ID: 8C8829B7-93A5-40A2-9DFD-ACDCBCE2BFC5

SECTION 00 4322 - UNIT PRICES FORM

1.1 BID INFORMATION

A. Bidder: Perrotto Builders, Ltd.

B. Bid Package (Prime Contract Package): General Construction.

C. Project Name: READING FIRE STATION.

D. Project Location: 1201 North 9th Street, Reading, PA, 19604.

E. Owner: City of Reading.

F. Architect: Manns Woodward Studios Inc.

G. Architect Project Number: 20-088.

H. Construction Manager: Boyle Construction, Inc..

1.2 BID FORM SUPPLEMENT

A. This form is required to be attached to the Bid Form.

B. The undersigned Bidder proposes the amounts below be added to or deducted from the Contract Sum on performance and measurement of the individual items of Work and for adjustment of the quantity given in the Unit-Price Allowance for the actual measurement of individual items of the Work.

C. If the unit price does not affect the Work of this Contract, the Bidder shall indicate "NOT APPLICABLE."

1.3 UNIT PRICES

A. Unit Price No. 1: Removal of Unsatisfactory Soil

1. Forty-five 00/100 dollars ($45.00) per unit.

DocuSign Envelope ID: 8DBEB8AA-0E8A-4E60-958F-1F24043B8B5F

DocuSign Envelope ID: 8C8829B7-93A5-40A2-9DFD-ACDCBCE2BFC5

B. Unit Price No. 2: Rock Removal

1. Three hundred Fifty 00/100 dollars ($ 350.00) per unit

C. Unit Price No. 3: Soil Moisture Reduction; Quicklime

1. One hundred fifty 00/100 dollars ($ 150.00) per unit

D. Unit Price No. 4: PennDOT 2A Fill

1. Fifty-five 00/100 dollars ($ 55.00) per unit

E. Unit Price No. 5: #57 Stone Fill

1. Sixty-five 00/100 dollars ($ 65.00) per unit

F. Unit Price No. 6: Granular natural soil fill

1. Fifty-five 00/100 dollars ($ 55.00) per unit

1.4 SUBMISSION OF BID SUPPLEMENT

A. Respectfully submitted this 9 day of Sept, 2021.

B. Submitted By: Perrotto Builders, Ltd. (Insert name of bidding firm or corporation).

C. Authorized Signature: _____ (Handwritten signature).

D. Signed By: James P. Radwanski (Type or print name).

E. Title: Owner/President (Owner/Partner/President/Vice President).

END OF DOCUMENT 004322

DocuSign Envelope ID: 8DBEB8AA-0E8A-4E60-958F-1F24043B8B5F

DocuSign Envelope ID: 8C8829B7-93A5-40A2-9DFD-ACDCBCE2BFC5

SECTION 00 4323 - ALTERNATES FORM

1.1 BID INFORMATION

A. Bidder: Perrotto Builders, Ltd.

B. Bid Package (Prime Contract Package): General Construction.

C. Project Name: READING FIRE STATION.

D. Project Location: 1201 North 9th Street, Reading, PA, 19604.

E. Owner: City of Reading.

F. Architect: Manns Woodward Studios, Inc..

G. Architect Project Number: 20-088.

H. Construction Manager: Boyle Construction, Inc..

1.2 BID FORM SUPPLEMENT

A. This form is required to be attached to the Bid Form.

1.3 DESCRIPTION

A. The undersigned Bidder proposes the amount below be added to or deducted from the Base Bid if particular alternates are accepted by Owner. Amounts listed for each alternate include costs of related coordination, modification, or adjustment.

B. If the alternate does not affect the Contract Sum, the Bidder shall indicate "NO CHANGE."

C. If the alternate does not affect the Work of this Contract, the Bidder shall indicate "NOT APPLICABLE."

D. Owner reserves the right to accept or reject any alternate, in any order, and to award or amend the Contract accordingly within 60 days of the Notice of Award unless otherwise indicated in the Contract Documents.

DocuSign Envelope ID: 8DBEB8AA-0E8A-4E60-958F-1F24043B8B5F

DocuSign Envelope ID: 8C8829B7-93A5-40A2-9DFD-ACDCBCE2BFC5

E. Acceptance or non-acceptance of any alternates by the Owner shall have no affect on the Contract Time unless the "Schedule of Alternates" Article below provides a formatted space for the adjustment of the Contract Time.

1.4 SCHEDULE OF ALTERNATES

A. Alternate No. 1: Epoxy Terrazzo Tile:

1. ADD X DEDUCT___ NO CHANGE___ NOT APPLICABLE___.
2. Seventy-five thousand 00/100 Dollars ($75,000.00).

1.5 SUBMISSION OF BID SUPPLEMENT

A. Respectfully submitted this 9 day of Sept, 2021.

B. Submitted By: Perrotto Builders, Ltd. (Insert name of bidding firm or corporation).

C. Authorized Signature: _____ (Handwritten signature).

D. Signed By: James P. Radwanski (Type or print name).

E. Title: Owner/President (Owner/Partner/President/Vice President).

END OF DOCUMENT 004323

DocuSign Envelope ID: 8DBEB8AA-0E8A-4E60-958F-1F24043B8B5F

DocuSign Envelope ID: 8C8829B7-93A5-40A2-9DFD-ACDCBCE2BFC5

SECTION 00 4322 - UNIT PRICES FORM

1.1 BID INFORMATION

A. Bidder: Perrotto Builders, ltd.

B. Bid Package (Prime Contract Package): General Construction

C. Project Name: READING FIRE STATION.

D. Project Location: 1201 North 9th Street, Reading, PA, 19604.

E. Owner: City of Reading.

F. Architect: Manns Woodward Studios Inc.

G. Architect Project Number: 20-088.

H. Construction Manager: Boyle Construction, Inc..

1.2 BID FORM SUPPLEMENT

A. This form is required to be attached to the Bid Form.

B. The undersigned Bidder proposes the amounts below be added to or deducted from the Contract Sum on performance and measurement of the individual items of Work and for adjustment of the quantity given in the Unit-Price Allowance for the actual measurement of individual items of the Work.

C. If the unit price does not affect the Work of this Contract, the Bidder shall indicate "NOT APPLICABLE."

1.3 UNIT PRICES

A. Unit Price No. 1: Removal of Unsatisfactory Soil

1. Forty-five 00/100 dollars ($ 45.00) per unit.

B. Unit Price No. 2: Rock Removal

1. Three hundred fifty 00/100 dollars ($ 350.00) per unit

C. Unit Price No. 3: Soil Moisture Reduction; Quicklime

1. One hundred fifty 00/100 dollars ($ 150.00) per unit

DocuSign Envelope ID: 8DBEB8AA-0E8A-4E60-958F-1F24043B8B5F

DocuSign Envelope ID: 8C8829B7-93A5-40A2-9DFD-ACDCBCE2BFC5

D. Unit Price No. 4: PennDOT 2A Fill

1. Fifty-five 00/100 dollars ($ 55.00) per unit

E. Unit Price No. 5: #57 Stone Fill

1. Sixty-five 00/100 dollars ($ 65.00) per unit

F. Unit Price No. 6: Granular natural soil fill

1. Fifty-five 00/100 dollars ($ 55.00) per unit

G. Unit Price No. 7: Concrete Curbing

1. Forty-five 00/100 dollars($ 45.00) per unit

H. Unit Price No. 8: Concrete Sidewalk

1. Four hundred 00/100 dollars($ 400.00) per unit

1.4 SUBMISSION OF BID SUPPLEMENT

A. Respectfully submitted this 9 day of Sept, 2021.

B. Submitted By: Perrotto Builders, Ltd. (Insert name of bidding firm or corporation).

C. Authorized Signature: James P. Radwanski/SSN (Handwritten signature).

D. Signed By: James P. Radwanski/SSN (Type or print name).

E. Title: Owner/President (Owner/Partner/President/Vice President).

END OF DOCUMENT 004322

DocuSign Envelope ID: 8DBEB8AA-0E8A-4E60-958F-1F24043B8B5F

DocuSign Envelope ID: 8C8829B7-93A5-40A2-9DFD-ACDCBCE2BFC5

CERTIFICATE OF ACKNOWLEDGMENT OF RECEIPT OF ADDENDUM

THE CITY OF READING

ADDENDUM NO. 1

RFP: 9th and Marion Fire Station

DUE DATE: August 24, 2021
3:00 P.M. Prevailing Time

NOTICE

Attached is Addendum #1 for the 9th and Marion Fire Station

I, HEREBY CERTIFY THAT THE CHANGES COVERED BY THIS ADDENDUM HAVE BEEN TAKEN INTO ACCOUNT.

Firm Name (Type or Print) Pergotto Builders Ltd

Authorized Signature

Title Owner / President

Name (Type or Print) James P. Radwanski

Date 9/9/21

DocuSign Envelope ID: 8DBEB8AA-0E8A-4E60-958F-1F24043B8B5F

DocuSign Envelope ID: 8C8829B7-93A5-40A2-9DFD-ACDCBCE2BFC5

CERTIFICATE OF ACKNOWLEDGMENT OF RECEIPT OF ADDENDUM

THE CITY OF READING

ADDENDUM NO. 2

RFP: **9th and Marion Fire Station**

DUE DATE: September 2, 2021
3:00 P.M. Prevailing Time

NOTICE

PLEASE BE ADVISED THAT THE NEW DUE DATE FOR THE 9TH AND MARION FIRE STATION WILL BE 3:00 PM, PREVAILING TIME, ON THURSDAY, SEPTEMBER 2, 2021.

I, HEREBY CERTIFY THAT THE CHANGES COVERED BY THIS ADDENDUM HAVE BEEN TAKEN INTO ACCOUNT.

Firm Name (Type or Print) Perrotto Builders, Ltd

Authorized Signature

Title President / owner

Name (Type or Print) James P. Radwanski

Date 9/9/21

DocuSign Envelope ID: 8DBEB8AA-0E8A-4E60-958F-1F24043B8B5F

DocuSign Envelope ID: 8C8829B7-93A5-40A2-9DFD-ACDCBCE2BFC5

CERTIFICATE OF ACKNOWLEDGMENT OF RECEIPT OF ADDENDUM

THE CITY OF READING

ADDENDUM NO. 3

RFP: **9th and Marion Fire Station**

DUE DATE: September 2, 2021
3:00 P.M. Prevailing Time

NOTICE

PLEASE BE ADVISED THAT THE NEW DUE DATE FOR THE 9TH AND MARION FIRE STATION WILL BE 3:00 PM, PREVAILING TIME, ON THURSDAY, SEPTEMBER 2, 2021.

I, HEREBY CERTIFY THAT THE CHANGES COVERED BY THIS ADDENDUM HAVE BEEN TAKEN INTO ACCOUNT.

Firm Name (Type or Print) Perrotto Builders, Ltd

Authorized Signature

Title President/owner

Name (Type or Print) James P. Radwanski

Date 9/9/21

DocuSign Envelope ID: 8DBEB8AA-0E8A-4E60-958F-1F24043B8B5F

DocuSign Envelope ID: 8C8829B7-93A5-40A2-9DFD-ACDCBCE2BFC5

CERTIFICATE OF ACKNOWLEDGMENT OF RECEIPT OF ADDENDUM

THE CITY OF READING

ADDENDUM NO. 4

RFP: **9th and Marion Fire Station**

DUE DATE: September 2, 2021
3:00 P.M. Prevailing Time

NOTICE

I, HEREBY CERTIFY THAT THE CHANGES COVERED BY THIS ADDENDUM HAVE BEEN TAKEN INTO ACCOUNT.

Firm Name (Type or Print) Perrotto Builders, Ltd

Authorized Signature

Title President/owner

Name (Type or Print) James P. Radwanski

Date 9/9/21

DocuSign Envelope ID: 8DBEB8AA-0E8A-4E60-958F-1F24043B8B5F

DocuSign Envelope ID: 8C8829B7-93A5-40A2-9DFD-ACDCBCE2BFC5

CERTIFICATE OF ACKNOWLEDGMENT OF RECEIPT OF ADDENDUM

THE CITY OF READING

ADDENDUM NO. 5

RFP: **9th and Marion Fire Station**

DUE DATE: September 2, 2021
3:00 P.M. Prevailing Time

NOTICE

I, HEREBY CERTIFY THAT THE CHANGES COVERED BY THIS ADDENDUM HAVE BEEN TAKEN INTO ACCOUNT.

Firm Name (Type or Print) Perrotto Builders, Ltd

Authorized Signature

Title President / owner

Name (Type or Print) James P. Radwanski

Date 9/9/21

DocuSign Envelope ID: 8DBEB8AA-0E8A-4E60-958F-1F24043B8B5F

DocuSign Envelope ID: 8C8829B7-93A5-40A2-9DFD-ACDCBCE2BFC5

Q13. Addendum 1, Item 2, 2 requires the GC to provide qualification statements for their earthwork and sheeting and shoring subs. We will not know who these are until bid day since subs will be working on the project up until that day to be sure to have all addendums and information. Can these qualification statements be provided within 48 hours of the bid by the low bidders?

A13. Qualification statements must be provided as required in bid documents.

Q14. Does the city require dumpster permits? If so, how much or who do we contact for pricing?

A14. Contact the City of Reading with your inquiry

Q15. Is the plumbing contractor responsible for the water supply and sanitary waste of the common use field office? It appears they may be per spec.01 1320D, item 1.1 B, but we want to clarify.

A15. Please refer to multi-contract summary

Q16. Will there be a cost for the contractors for use of the web-based project management software site?

A16. There is no cost for use of Procore

Q17. Please confirm the unclassified excavation is only to design depths. If we have to dig beyond depths indicated on documents (below bottom of footing, or below site grade for example) we would be paid based on the unit costs we are to provide. If the site is unclassified to any depths we could end up digging 50 feet deep if it is unsuitable. There is no way to quantify a bid if we own beyond design depths, it would be open ended.

A17. Please refer to Geotech Reports and bid documents. GC is responsible for unsuitable soils.

I, HEREBY CERTIFY THAT THE CHANGES COVERED BY THIS ADDENDUM HAVE BEEN TAKEN INTO ACCOUNT.

Firm Name (Type or Print) Perrotto Builders Ltd

Authorized Signature

Title President/owner

DocuSign Envelope ID: 8DBEB8AA-0E8A-4E60-958F-1F24043B8B5F

DocuSign Envelope ID: 8C8829B7-93A5-40A2-9DFD-ACDCBCE2BFC5

Name (Type or Print) James P. Radwanski

Date 9/9/21

DocuSign Envelope ID: 8DBEB8AA-0E8A-4E60-958F-1F24043B8B5F

DocuSign Envelope ID: 8C8829B7-93A5-40A2-9DFD-ACDCBCE2BFC5

CERTIFICATE OF ACKNOWLEDGMENT OF RECEIPT OF ADDENDUM

THE CITY OF READING

ADDENDUM NO. 7

RFP: **9th and Marion Fire Station**

DUE DATE: September 9, 2021
3:00 P.M. Prevailing Time

NOTICE

PLEASE BE ADVISED THAT THE 9TH AND MARION FIRE STATION DUE DATE HAS BEEN EXTENDED TO 9/9/2021 AT 3:00 PM PREVAILING TIME.

I, HEREBY CERTIFY THAT THE CHANGES COVERED BY THIS ADDENDUM HAVE BEEN TAKEN INTO ACCOUNT.

Firm Name (Type or Print) Perrotto Builders, Ltd

Authorized Signature

Title President/owner

Name (Type or Print) James P. Radwanski

Date 9/9/21

DocuSign Envelope ID: 8DBEB8AA-0E8A-4E60-958F-1F24043B8B5F

DocuSign Envelope ID: 8C8829B7-93A5-40A2-9DFD-ACDCBCE2BFC5

AIA® Document A310™ – 2010

Bid Bond

CONTRACTOR:
(Name, legal status and address)

Perrotto Builders, Ltd.
426 Warren Street
Reading, PA 19601-1611

SURETY:
(Name, legal status and principal place of business)

Travelers Casualty and Surety Company of America
ONE TOWER SQUARE, HARTFORD, CT 06183

OWNER:
(Name, legal status and address)

The City of Reading
815 Washington Street
Reading, PA 19601

BOND AMOUNT: $ Ten Percent of the total amount bid and all add alternates (10%)

PROJECT:
(Name, location or address, and Project number, if any)

New Fire Station @ 9th & Marion Streets, 1201 North 9th Street, Reading, PA 19604

ADDITIONS AND DELETIONS:
The author of this document has added information needed for its completion. The author may also have revised the text of the original AIA standard form. An *Additions and Deletions Report* that notes added information as well as revisions to the standard form text is available from the author and should be reviewed. A vertical line in the left margin of this document indicates where the author has added necessary information and where the author has added to or deleted from the original AIA text.

This document has important legal consequences. Consultation with an attorney is encouraged with respect to its completion or modification.

Any singular reference to Contractor, Surety, Owner or other party shall be considered plural where applicable.

The Contractor and Surety are bound to the Owner in the amount set forth above, for the payment of which the Contractor and Surety bind themselves, their heirs, executors, administrators, successors and assigns, jointly and severally, as provided herein. The conditions of this Bond are such that if the Owner accepts the bid of the Contractor within the time specified in the bid documents, or within such time period as may be agreed to by the Owner and Contractor, and the Contractor either (1) enters into a contract with the Owner in accordance with the terms of such bid, and gives such bond or bonds as may be specified in the bidding or Contract Documents, with a surety admitted in the jurisdiction of the Project and otherwise acceptable to the Owner, for the faithful performance of such Contract and for the prompt payment of labor and material furnished in the prosecution thereof; or (2) pays to the Owner the difference, not to exceed the amount of this Bond, between the amount specified in said bid and such larger amount for which the Owner may in good faith contract with another party to perform the work covered by said bid, then this obligation shall be null and void, otherwise to remain in full force and effect. The Surety hereby waives any notice of an agreement between the Owner and Contractor to extend the time in which the Owner may accept the bid. Waiver of notice by the Surety shall not apply to any extension exceeding sixty (60) days in the aggregate beyond the time for acceptance of bids specified in the bid documents, and the Owner and Contractor shall obtain the Surety's consent for an extension beyond sixty (60) days.

If this Bond is issued in connection with a subcontractor's bid to a Contractor, the term Contractor in this Bond shall be deemed to be Subcontractor and the term Owner shall be deemed to be Contractor.

When this Bond has been furnished to comply with a statutory or other legal requirement in the location of the Project, any provision in this Bond conflicting with said statutory or legal requirement shall be deemed deleted herefrom and provisions conforming to such statutory or other legal requirement shall be deemed incorporated herein. When so furnished, the intent is that this Bond shall be construed as a statutory bond and not as a common law bond.

Init.
/

AIA Document A310™ – 2010. Copyright © 1963, 1970 and 2010 by The American Institute of Architects. All rights reserved. WARNING: This AIA® Document is protected by U.S. Copyright Law and International Treaties. Unauthorized reproduction or distribution of this AIA® Document, or any portion of it, may result in severe civil and criminal penalties, and will be prosecuted to the maximum extent possible under the law. This document was produced by AIA software at 10:58:13 on 01/03/2012 under Order No.4786209459_1 which expires on 04/13/2012, and is not for resale.
User Notes: (1097232466)

DocuSign Envelope ID: 8DBEB8AA-0E8A-4E60-958F-1F24043B8B5F

DocuSign Envelope ID: 8C8829B7-93A5-40A2-9DFD-ACDCBCE2BFC5

Signed and sealed this 24th day of August 2021,

	Perrotto Builders, Ltd.
	(Contractor as Principal) *(Seal)*
(Witness)	*(Title)* James P. Radwanski, President/Owner
	Travelers Casualty and Surety Company of America
	(Surety) *(Seal)*
(Witness) Jeffrey Cummings, Witness	*(Title)* Morgan S. Ellis, Attorney-in-fact

Init. / AIA Document A310™ – 2010. Copyright © 1963, 1970 and 2010 by The American Institute of Architects. All rights reserved. WARNING: This AIA® Document is protected by U.S. Copyright Law and International Treaties. Unauthorized reproduction or distribution of this AIA® Document, or any portion of it, may result in severe civil and criminal penalties, and will be prosecuted to the maximum extent possible under the law. This document was produced by AIA software at 10:58:13 on 01/03/2012 under Order No.4786269459_1 which expires on 04/13/2012, and is not for resale.
User Notes: (1097232466)

DocuSign Envelope ID: 8DBEB8AA-0E8A-4E60-958F-1F24043B8B5F

DocuSign Envelope ID: 8C8829B7-93A5-40A2-9DFD-ACDCBCE2BFC5

AIA® Document A305™ – 2020

Contractor's Qualification Statement

THE PARTIES SHOULD EXECUTE A SEPARATE CONFIDENTIALITY AGREEMENT IF THEY INTEND FOR ANY OF THE INFORMATION IN THIS A305-2020 TO BE HELD CONFIDENTIAL.

SUBMITTED BY:
(Organization name and address.)
Perrotto Builders Ltd
426 Warren Street
Reading, PA 19601

SUBMITTED TO:
(Organization name and address.)
The City of Reading
815 Washington Street
Reading, PA 19601

This document has important legal consequences. Consultation with an attorney is encouraged with respect to its completion or modification.

TYPE OF WORK TYPICALLY PERFORMED
(Indicate the type of work your organization typically performs, such as general contracting, construction manager as constructor services, HVAC contracting, electrical contracting, plumbing contracting, or other.)

General Construction

THIS CONTRACTOR'S QUALIFICATION STATEMENT INCLUDES THE FOLLOWING:
(Check all that apply.)

- ☒ Exhibit A – General Information
- ☐ Exhibit B – Financial and Performance Information
- ☒ Exhibit C – Project-Specific Information
- ☒ Exhibit D – Past Project Experience
- ☒ Exhibit E – Past Project Experience (Continued)

CONTRACTOR CERTIFICATION
The undersigned certifies under oath that the information provided in this Contractor's Qualification Statement is true and sufficiently complete so as not to be misleading.

[signature] 9/9/21
Organization's Authorized Representative Signature **Date**

James P. Rohwanski, President/Owner
Printed Name and Title

NOTARY
State of: Pa
County of: Berks

Signed and sworn to before me this 9 day of September, 2021

Francine D. Norris
Notary Signature

My commission expires: 7/22/25

Commonwealth of Pennsylvania - Notary Seal
Francine D. Norris, Notary Public
Berks County
My commission expires July 22, 2025
Commission number 1216832
Member, Pennsylvania Association of Notaries

Init.
/

AIA Document A305™ – 2020. Copyright © 1964, 1969, 1979, 1986, and 2020 by The American Institute of Architects. All rights reserved. The "American Institute of Architects," "AIA," the AIA Logo, and "AIA Contract Documents" are registered trademarks and may not be used without permission. This document was created on 01/12/2021 14:53:27 under the terms of AIA Documents on Demand® Order No. 2010652756 , is not for resale, is licensed for one-time use only, and may only be used in accordance with the AIA Contract Documents® Documents-on-Demand – End User License Agreement. To report copyright violations, e-mail copyright@aia.org.

DocuSign Envelope ID: 8DBEB8AA-0E8A-4E60-958F-1F24043B8B5F

DocuSign Envelope ID: 8C8829B7-93A5-40A2-9DFD-ACDCBCE2BFC5

EHD
1857 William Penn Way
PO Box 11600
Lancaster, PA 17601

717.394.5681 or
800.544.7292
(F) 717.394.0842
ehd-ins.com

EHD | a trusted partner for 125 YEARS

Consent of Surety

The City of Reading
815 Washington Street
Reading, PA 19601

RE: Perrotto Builders, Ltd
New Fire Station @ 9th & Marion Streets,
1201 North 9th Street, Reading, PA 19604

To Whom It May Concern:

We are pleased to be the surety agent for the above-referenced contractor. In the event this firm enters into a contract with you for this project, Travelers Casualty and Surety Company of America is prepared to execute the required Performance and Payment bonds in the full amount of the contract.

Signed and Sealed Date: 8/24/2021

Travelers Casualty and Surety Company of America

Morgan S. Ellis
Attorney-In-Fact

DocuSign Envelope ID: 8DBEB8AA-0E8A-4E60-958F-1F24043B8B5F

DocuSign Envelope ID: 8C8829B7-93A5-40A2-9DFD-ACDCBCE2BFC5

TRAVELERS	Travelers Casualty and Surety Company of America Travelers Casualty and Surety Company St. Paul Fire and Marine Insurance Company

POWER OF ATTORNEY

KNOW ALL MEN BY THESE PRESENTS: That Travelers Casualty and Surety Company of America, Travelers Casualty and Surety Company, and St. Paul Fire and Marine Insurance Company are corporations duly organized under the laws of the State of Connecticut (herein collectively called the "Companies"), and that the Companies do hereby make, constitute and appoint **MORGAN S ELLIS** of **LANCASTER**, **Pennsylvania**, their true and lawful Attorney-in-Fact to sign, execute, seal and acknowledge any and all bonds, recognizances, conditional undertakings and other writings obligatory in the nature thereof on behalf of the Companies in their business of guaranteeing the fidelity of persons, guaranteeing the performance of contracts and executing or guaranteeing bonds and undertakings required or permitted in any actions or proceedings allowed by law.

IN WITNESS WHEREOF, the Companies have caused this instrument to be signed, and their corporate seals to be hereto affixed, this **17th** day of **January, 2019.**

State of Connecticut

City of Hartford ss.

By: _____
Robert L. Raney, Senior Vice President

On this the **17th** day of **January, 2019**, before me personally appeared **Robert L. Raney**, who acknowledged himself to be the Senior Vice President of Travelers Casualty and Surety Company of America, Travelers Casualty and Surety Company, and St. Paul Fire and Marine Insurance Company, and that he, as such, being authorized so to do, executed the foregoing instrument for the purposes therein contained by signing on behalf of said Companies by himself as a duly authorized officer.

IN WITNESS WHEREOF, I hereunto set my hand and official seal.

My Commission expires the **30th** day of **June, 2021**

_____
Anna P. Nowik, Notary Public

This Power of Attorney is granted under and by the authority of the following resolutions adopted by the Boards of Directors of Travelers Casualty and Surety Company of America, Travelers Casualty and Surety Company, and St. Paul Fire and Marine Insurance Company, which resolutions are now in full force and effect, reading as follows:

RESOLVED, that the Chairman, the President, any Vice Chairman, any Executive Vice President, any Senior Vice President, any Vice President, any Second Vice President, the Treasurer, any Assistant Treasurer, the Corporate Secretary or any Assistant Secretary may appoint Attorneys-in-Fact and Agents to act for and on behalf of the Company and may give such appointee such authority as his or her certificate of authority may prescribe to sign with the Company's name and seal with the Company's seal bonds, recognizances, contracts of indemnity, and other writings obligatory in the nature of a bond, recognizance, or conditional undertaking, and any of said officers or the Board of Directors at any time may remove any such appointee and revoke the power given him or her; and it is

FURTHER RESOLVED, that the Chairman, the President, any Vice Chairman, any Executive Vice President, any Senior Vice President or any Vice President may delegate all or any part of the foregoing authority to one or more officers or employees of this Company, provided that each such delegation is in writing and a copy thereof is filed in the office of the Secretary; and it is

FURTHER RESOLVED, that any bond, recognizance, contract of indemnity, or writing obligatory in the nature of a bond, recognizance, or conditional undertaking shall be valid and binding upon the Company when (a) signed by the President, any Vice Chairman, any Executive Vice President, any Senior Vice President or any Vice President, any Second Vice President, the Treasurer, any Assistant Treasurer, the Corporate Secretary or any Assistant Secretary and duly attested and sealed with the Company's seal by a Secretary or Assistant Secretary; or (b) duly executed (under seal, if required) by one or more Attorneys-in-Fact and Agents pursuant to the power prescribed in his or her certificate or their certificates of authority or by one or more Company officers pursuant to a written delegation of authority; and it is

FURTHER RESOLVED, that the signature of each of the following officers: President, any Executive Vice President, any Senior Vice President, any Vice President, any Assistant Vice President, any Secretary, any Assistant Secretary, and the seal of the Company may be affixed by facsimile to any Power of Attorney or to any certificate relating thereto appointing Resident Vice Presidents, Resident Assistant Secretaries or Attorneys-in-Fact for purposes only of executing and attesting bonds and undertakings and other writings obligatory in the nature thereof, and any such Power of Attorney or certificate bearing such facsimile signature or facsimile seal shall be valid and binding upon the Company and any such power so executed and certified by such facsimile signature and facsimile seal shall be valid and binding on the Company in the future with respect to any bond or understanding to which it is attached.

I, **Kevin E. Hughes**, the undersigned, Assistant Secretary of Travelers Casualty and Surety Company of America, Travelers Casualty and Surety Company, and St. Paul Fire and Marine Insurance Company, do hereby certify that the above and foregoing is a true and correct copy of the Power of Attorney executed by said Companies, which remains in full force and effect.

Dated this **24th** day of **August**, **2021**.

_____
Kevin E. Hughes, Assistant Secretary

To verify the authenticity of this Power of Attorney, please call us at 1-800-421-3880.
Please refer to the above-named Attorney-in-Fact and the details of the bond to which this Power of Attorney is attached.

DocuSign Envelope ID: 8DBEB8AA-0E8A-4E60-958F-1F24043B8B5F

DocuSign Envelope ID: 8C8829B7-93A5-40A2-9DFD-ACDCBCE2BFC5

AIA® Document A305™ – 2020 Exhibit A

General Information

This Exhibit is part of the Contractor's Qualification Statement, submitted by
Perrotto Builders, Ltd.
and dated the 9 day of September
in the year 2021
(In words, indicate day, month and year.)

This document has important legal consequences. Consultation with an attorney is encouraged with respect to its completion or modification.

§ A.1 ORGANIZATION
§ A.1.1 Name and Location
§ A.1.1.1 Identify the full legal name of your organization.

Perrotto Builders, Ltd.

§ A.1.1.2 List all other names under which your organization currently does business and, for each name, identify jurisdictions in which it is registered to do business under that trade name.
Perrotto Builders, Ltd., Pennsylvania
JJAD Concrete & Excavation Co, Pennsylvania

§ A.1.1.3 List all prior names under which your organization has operated and, for each name, indicate the date range and jurisdiction in which it was used.
Samuel Perrotto & Company

§ A.1.1.4 Identify the address of your organization's principal place of business and list all office locations out of which your organization conducts business. If your organization has multiple offices, you may attach an exhibit or refer to a website.
426 Warren Street
Reading, PA 19601

§ A.1.2 Legal Status
§ A.1.2.1 Identify the legal status under which your organization does business, such as sole proprietorship, partnership, corporation, limited liability corporation, joint venture, or other.

Corporation

.1 If your organization is a corporation, identify the state in which it is incorporated, the date of incorporation, and its four highest-ranking corporate officers and their titles, as applicable.
Pennsylvania
1981
James P. Radwanski, owner

.2 If your organization is a partnership, identify its partners and its date of organization.
n/a

AIA Document A305™ – 2020 Exhibit A. Copyright © 2020 by The American Institute of Architects. All rights reserved. The "American Institute of Architects," "AIA," the AIA Logo, and "AIA Contract Documents" are registered trademarks and may not be used without permission. This document was created on 01/12/2021 14:53:27 under the terms of AIA Documents on Demand® Order No. 2010652756 , is not for resale, is licensed for one-time use only, and may only be used in accordance with the AIA Contract Documents® Documents-on-Demand – End User License Agreement. To report copyright violations, e-mail copyright@aia.org.

DocuSign Envelope ID: 8DBEB8AA-0E8A-4E60-958F-1F24043B8B5F

DocuSign Envelope ID: 8C8829B7-93A5-40A2-9DFD-ACDCBCE2BFC5

.3 If your organization is individually owned, identify its owner and date of organization.
n/a

.4 If the form of your organization is other than those listed above, describe it and identify its individual leaders:
n/a

§ A.1.2.2 Does your organization own, in whole or in part, any other construction-related businesses? If so, identify and describe those businesses and specify percentage of ownership.
none

§ A.1.3 Other Information
§ A.1.3.1 How many years has your organization been in business?

87 years

§ A.1.3.2 How many full-time employees work for your organization?

0-20

§ A.1.3.3 List your North American Industry Classification System (NAICS) codes and titles. Specify which is your primary NAICS code.

236220

§ A.1.3.4 Indicate whether your organization is certified as a governmentally recognized special business class, such as a minority business enterprise, woman business enterprise, service disabled veteran owned small business, woman owned small business, small business in a HUBZone, or a small disadvantaged business in the 8(a) Business Development Program. For each, identify the certifying authority and indicate jurisdictions to which such certification applies.
n/a

§ A.2 EXPERIENCE
§ A.2.1 Complete Exhibit D to describe up to four projects, either completed or in progress, that are representative of your organization's experience and capabilities.

§ A.2.2 State your organization's total dollar value of work currently under contract.

$60,000,000.00

§ A.2.3 Of the amount stated in Section A.2.2, state the dollar value of work that remains to be completed:

$39,000,000.00

AIA Document A305™ – 2020 Exhibit A. Copyright © 2020 by The American Institute of Architects. All rights reserved. The "American Institute of Architects," "AIA," the AIA Logo, and "AIA Contract Documents" are registered trademarks and may not be used without permission. This document was created on 01/12/2021 14:53:27 under the terms of AIA Documents on Demand® Order No. 2010652756 , is not for resale, is licensed for one-time use only, and may only be used in accordance with the AIA Contract Documents® Documents-on-Demand – End User License Agreement. To report copyright violations, e-mail copyright@aia.org.

§ A.2.4 State your organization's average annual dollar value of construction work performed during the last five years.

$35-40 Million

§ A.3 CAPABILITIES

§ A.3.1 List the categories of work that your organization typically self-performs.

Casrpentry, excavation, concrete work, doors/frames/hardware installation, rough openings, wood blocking, slective demolition, installation of Division 10 items

§ A.3.2 Identify qualities, accreditations, services, skills, or personnel that you believe differentiate your organization from others.

n/a

§ A.3.3 Does your organization provide design collaboration or pre-construction services? If so, describe those services.

n/a

§ A.3.4 Does your organization use building information modeling (BIM)? If so, describe how your organization uses BIM and identify BIM software that your organization regularly uses.

n/a

§ A.3.5 Does your organization use a project management information system? If so, identify that system.

yes, Procor

§ A.4 REFERENCES

§ A.4.1 Identify three client references:

(Insert name, organization, and contact information)

Joe Lubisky, CCIU, 610-383-5439
Mike Cafoncelli, Wyomissing Area School District, 484-532-6349
Jennifer Bossler, Tower Health, 484-628-4353

§ A.4.2 Identify three architect references:

(Insert name, organization, and contact information)

Jacob Shoemaker, Ballinger, 215-446-0496
Todd Vukmanic, Crabtree, Rohrbaugh & Assoc., 717-458-0272
Laural Falcon, KCBA, 215-368-5806

§ A.4.3 Identify one bank reference:

(Insert name, organization, and contact information)

BB&T 610-376-9101

AIA Document A305™ – 2020 Exhibit A. Copyright © 2020 by The American Institute of Architects. All rights reserved. The "American Institute of Architects," "AIA," the AIA Logo, and "AIA Contract Documents" are registered trademarks and may not be used without permission. This document was created on 01/12/2021 14:53:27 under the terms of AIA Documents on Demand® Order No. 2010052756 , is not for resale, is licensed for one-time use only, and may only be used in accordance with the AIA Contract Documents® Documents-on-Demand – End User License Agreement. To report copyright violations, e-mail copyright@aia.org.

DocuSign Envelope ID: 8DBEB8AA-0E8A-4E60-958F-1F24043B8B5F

DocuSign Envelope ID: 8C8829B7-93A5-40A2-9DFD-ACDCBCE2BFC5

§ A.4.4 Identify three subcontractor or other trade references:
(Insert name, organization, and contact information)

East Coast SteelFab/Michael Ortolano/610-898-3445
Guy C. Long/Tom Long/484-361-4485
Construction Services International/Herb Scheuren, Jr/215-703-0833

AIA Document A305™ – 2020 Exhibit A. Copyright © 2020 by The American Institute of Architects. All rights reserved. The "American Institute of Architects," "AIA," the AIA Logo, and "AIA Contract Documents" are registered trademarks and may not be used without permission. This document was created on 01/12/2021 14:53:27 under the terms of AIA Documents on Demand® Order No. 2010652756 , is not for resale, is licensed for one-time use only, and may only be used in accordance with the AIA Contract Documents® Documents-on-Demand – End User License Agreement. To report copyright violations, e-mail copyright@aia.org.

DocuSign Envelope ID: 8DBEB8AA-0E8A-4E60-958F-1F24043B8B5F

DocuSign Envelope ID: 8C8829B7-93A5-40A2-9DFD-ACDCBCE2BFC5

AIA® Document A305™ – 2020 Exhibit B

Financial and Performance Information

This Exhibit is part of the Contractor's Qualification Statement, submitted by
Perrotto Builders, Ltd.
and dated the 9 day of September
in the year 2021
(In words, indicate day, month and year.)

This document has important legal consequences. Consultation with an attorney is encouraged with respect to its completion or modification.

§ B.1 FINANCIAL
§ B.1.1 Federal tax identification number:

23-2160257

§ B.1.2 Attach financial statements for the last three years prepared in accordance with Generally Accepted Accounting Principles, including your organization's latest balance sheet and income statement. Also, indicate the name and contact information of the firm that prepared each financial statement.

furnished if one of three lowest bidders

§ B.1.3 Has your organization, its parent, or a subsidiary, affiliate, or other entity having common ownership or management, been the subject of any bankruptcy proceeding within the last ten years?

No

§ B.1.4 Identify your organization's preferred credit rating agency and identification information.
(Identify rating agency, such as Dun and Bradstreet or Equifax, and insert your organization's identification number or other method of searching your organization's credit rating with such agency.)

n/a

§ B.2 DISPUTES AND DISCIPLINARY ACTIONS
§ B.2.1 Are there any pending or outstanding judgments, arbitration proceedings, bond claims, or lawsuits against your organization, its parent, or a subsidiary, affiliate, or other entity having common ownership or management, or any of the individuals listed in Exhibit A, Section 1.2, in which the amount in dispute is more than $75,000?
(If the answer is yes, provide an explanation.)

See Attachment "A"

§ B.2.2 In the last five years, has your organization, its parent, or a subsidiary, affiliate, or other entity having common ownership or management:
(If the answer to any of the questions below is yes, provide an explanation.)

.1 failed to complete work awarded to it?

No, however, please see Attchment "A" for a complete response to this question

AIA Document A305™ – 2020 Exhibit B. Copyright © 2020 by The American Institute of Architects. All rights reserved. The "American Institute of Architects," "AIA," the AIA Logo, and "AIA Contract Documents" are registered trademarks and may not be used without permission. This document was created on 01/12/2021 14:53:27 under the terms of AIA Documents on Demand® Order No. 2010052756 , is not for resale, is licensed for one-time use only, and may only be used in accordance with the AIA Contract Documents® Documents-on-Demand – End User License Agreement. To report copyright violations, e-mail copyright@aia.org.

DocuSign Envelope ID: 8DBEB8AA-0E8A-4E60-958F-1F24043B8B5F

DocuSign Envelope ID: 8C8829B7-93A5-40A2-9DFD-ACDCBCE2BFC5

.2 been terminated for any reason except for an owners' convenience?

No

.3 had any judgments, settlements, or awards pertaining to a construction project in which your organization was responsible for more than $75,000?

See Attachment "A"

.4 filed any lawsuits or requested arbitration regarding a construction project?

See Attachment "A"

§ B.2.3 In the last five years, has your organization, its parent, or a subsidiary, affiliate, or other entity having common ownership or management; or any of the individuals listed in Exhibit A Section 1.2:
(If the answer to any of the questions below is yes, provide an explanation.)

.1 been convicted of, or indicted for, a business-related crime?

No

.2 had any business or professional license subjected to disciplinary action?

No

.3 been penalized or fined by a state or federal environmental agency?

No

AIA Document A305™ – 2020 Exhibit B. Copyright © 2020 by The American Institute of Architects. All rights reserved. The "American Institute of Architects," "AIA," the AIA Logo, and "AIA Contract Documents" are registered trademarks and may not be used without permission. This document was created on 01/12/2021 14:53:27 under the terms of AIA Documents on Demand® Order No. 2010652756 , is not for resale, is licensed for one-time use only, and may only be used in accordance with the AIA Contract Documents® Documents-on-Demand – End User License Agreement. To report copyright violations, e-mail copyright@aia.org.

DocuSign Envelope ID: 8DBEB8AA-0E8A-4E60-958F-1F24043B8B5F

DocuSign Envelope ID: 8C8829B7-93A5-40A2-9DFD-ACDCBCE2BFC5

AIA® Document A305™ – 2020 Exhibit C

Project Specific Information

This Exhibit is part of the Contractor's Qualification Statement, submitted by
Perrotto Builders, Ltd.
and dated the 9 day of September
in the year 2021
(In words, indicate day, month and year.)

This document has important legal consequences. Consultation with an attorney is encouraged with respect to its completion or modification.

PROJECT:
(Name and location or address.)
New Fire Station @ 9th & Marion Streets

CONTRACTOR'S PROJECT OFFICE:
(Identify the office out of which the contractor proposes to perform the work for the Project.)
426 Warren Street
Reading, Pa 19601

TYPE OF WORK SOUGHT
(Indicate the type of work you are seeking for this Project, such as general contracting, construction manager as constructor, design-build, HVAC subcontracting, electrical subcontracting, plumbing subcontracting, etc.)

General Contracting

CONFLICT OF INTEREST
Describe any conflict of interest your organization, its parent, or a subsidiary, affiliate, or other entity having common ownership or management, or any of the individuals listed in Exhibit A Section 1.2, may have regarding this Project.

none

§ C.1 PERFORMANCE OF THE WORK
§ C.1.1 When was the Contractor's Project Office established?
1934

§ C.1.2 How many full-time field and office staff are respectively employed at the Contractor's Project Office?
12

§ C.1.3 List the business license and contractor license or registration numbers for the Contractor's Project Office that pertain to the Project.

C00003600

AIA Document A305™ – 2020 Exhibit C. Copyright © 2020 by The American Institute of Architects. All rights reserved. The "American Institute of Architects," "AIA," the AIA Logo, and "AIA Contract Documents" are registered trademarks and may not be used without permission. This document was created on 01/12/2021 14:53:27 under the terms of AIA Documents on Demand® Order No. 2010652756 , is not for resale, is licensed for one-time use only, and may only be used in accordance with the AIA Contract Documents® Documents-on-Demand – End User License Agreement. To report copyright violations, e-mail copyright@aia.org

DocuSign Envelope ID: 8DBEB8AA-0E8A-4E60-958F-1F24043B8B5F

DocuSign Envelope ID: 8C8829B7-93A5-40A2-9DFD-ACDCBCE2BFC5

§ C.1.4 Identify key personnel from your organization who will be meaningfully involved with work on this Project and indicate (1) their position on the Project team, (2) their office location, (3) their expertise and experience, and (4) projects similar to the Project on which they have worked.

See Attachment "B"

§ C.1.5 Identify portions of work that you intend to self-perform on this Project.

none

§ C.1.6 To the extent known, list the subcontractors you intend to use for major portions of work on the Project.

furnished if low bidder

§ C.2 EXPERIENCE RELATED TO THE PROJECT

§ C.2.1 Complete Exhibit D to describe up to four projects performed by the Contractor's Project Office, either completed or in progress, that are relevant to this Project, such as projects in a similar geographic area or of similar project type. If you have already completed Exhibit D, but want to provide further examples of projects that are relevant to this Project, you may complete Exhibit E.

§ C.2.2 State the total dollar value of work currently under contract at the Contractor's Project Office:

§ C.2.3 Of the amount stated in Section C.2.2, state the dollar value of work that remains to be completed:

§ C.2.4 State the average annual dollar value of construction work performed by the Contractor's Project Office during the last five years.

§ C.2.5 List the total number of projects the Contractor's Project Office has completed in the last five years and state the dollar value of the largest contract the Contractor's Project Office has completed during that time.

See Attachment "B"

§ C.3 SAFETY PROGRAM AND RECORD

§ C.3.1 Does the Contractor's Project Office have a written safety program?

Yes

§ C.3.2 List all safety-related citations and penalties the Contractor's Project Office has received in the last three years.

None

§ C.3.3 Attach the Contractor's Project Office's OSHA 300a Summary of Work-Related Injuries and Illnesses form for the last three years.

See attached

AIA Document A305™ – 2020 Exhibit C. Copyright © 2020 by The American Institute of Architects. All rights reserved. The "American Institute of Architects," "AIA," the AIA Logo, and "AIA Contract Documents" are registered trademarks and may not be used without permission. This document was created on 01/12/2021 14:53:27 under the terms of AIA Documents on Demand® Order No. 2010652756 , is not for resale, is licensed for one-time use only, and may only be used in accordance with the AIA Contract Documents® Documents-on-Demand – End User License Agreement. To report copyright violations, e-mail copyright@aia.org.

DocuSign Envelope ID: 8DBEB8AA-0E8A-4E60-958F-1F24043B8B5F

DocuSign Envelope ID: 8C8829B7-93A5-40A2-9DFD-ACDCBCE2BFC5

§ C.3.4 Attach a copy of your insurance agent's verification letter for your organization's current workers' compensation experience modification rate and rates for the last three years.

See attached

§ C.4 INSURANCE

§ C.4.1 Attach current certificates of insurance for your commercial general liability policy, umbrella insurance policy, and professional liability insurance policy, if any. Identify deductibles or self-insured retentions for your commercial general liability policy. See attached

§ C.4.2 If requested, will your organization be able to provide property insurance for the Project written on a builder's risk "all-risks" completed value or equivalent policy form and sufficient to cover the total value of the entire Project on a replacement cost basis?

yes

§ C.4.3 Does your commercial general liability policy contain any exclusions or restrictions of coverage that are prohibited in AIA Document A101-2017, Exhibit A, Insurance A.3.2.2.2? If so, identify.

No

§ C.5 SURETY

§ C.5.1 If requested, will your organization be able to provide a performance and payment bond for this Project?

yes

§ C.5.2 Surety company name:

Travelers Casualty and Surety Company of America

§ C.5.3 Surety agent name and contact information:

Engle-Hambright & Davies
PO Box 83080
Lancaster, PA 17608

§ C.5.4 Total bonding capacity:

80-100 million

§ C.5.5 Available bonding capacity as of the date of this qualification statement:

$80,000,000.00

AIA Document A305™ – 2020 Exhibit C. Copyright © 2020 by The American Institute of Architects. All rights reserved. The "American Institute of Architects," "AIA," the AIA Logo, and "AIA Contract Documents" are registered trademarks and may not be used without permission. This document was created on 01/12/2021 14:53:27 under the terms of AIA Documents on Demand® Order No. 2010052756 , is not for resale, is licensed for one-time use only, and may only be used in accordance with the AIA Contract Documents® Documents-on-Demand – End User License Agreement. To report copyright violations, e-mail copyright@aia.org.

DocuSign Envelope ID: 8DBEB8AA-0E8A-4E60-958F-1F24043B8B5F

DocuSign Envelope ID: 8C8829B7-93A5-40A2-9DFD-ACDCBCE2BFC5

AIA Document A305™ – 2020 Exhibit D

Contractor's Past Project Experience

	1	2	3	4
PROJECT NAME	See Attachment "B"	See Attachment "B"	See Attachment "B"	See Attachment "B"
PROJECT LOCATION				
PROJECT TYPE				
OWNER				
ARCHITECT				
CONTRACTOR'S PROJECT EXECUTIVE				
KEY PERSONNEL (include titles)				
PROJECT DETAILS	Contract Amount Completion Date % Self-Performed Work	Contract Amount Completion Date % Self-Performed Work	Contract Amount Completion Date % Self-Performed Work	Contract Amount Completion Date % Self-Performed Work
PROJECT DELIVERY METHOD	☐ Design-bid-build ☐ Design-build ☐ CM constructor ☐ CM advisor ☐ Other:	☐ Design-bid-build ☐ Design-build ☐ CM constructor ☐ CM advisor ☐ Other:	☐ Design-bid-build ☐ Design-build ☐ CM constructor ☐ CM advisor ☐ Other:	☐ Design-bid-build ☐ Design-build ☐ CM constructor ☐ CM advisor ☐ Other:
SUSTAINABILITY CERTIFICATIONS				

Init.

/

AIA Document A305™ – 2020 Exhibit D. Copyright © 2020 by The American Institute of Architects. All rights reserved. The "American Institute of Architects," "AIA," the AIA Logo, and "AIA Contract Documents" are registered trademarks and may not be used without permissionThis document was created on 01/12/2021 14:53:27 under the terms of AIA Documents on Demand® Order No. 2010352756 , is not for resale, is licensed for one-time use only, and may only be used in accordance with the AIA Contract Documents® Documents-on-Demand – End User License Agreement. To report copyright violations, e-mail copyright@aia.org.

DocuSign Envelope ID: 8DBEB8AA-0E8A-4E60-958F-1F24043B8B5F

DocuSign Envelope ID: 8C8829B7-93A5-40A2-9DFD-ACDCBCE2BFC5

AIA® Document A305™ – 2020 Exhibit E

Contractor's Past Project Experience, Continued

	1	2	3	4
PROJECT NAME	See Attachment "B"	See Attachment "B"	See Attachment "B"	See Attachment "B"
PROJECT LOCATION				
PROJECT TYPE				
OWNER				
ARCHITECT				
CONTRACTOR'S PROJECT EXECUTIVE				
KEY PERSONNEL (include titles)				
PROJECT DETAILS	Contract Amount Completion Date % Self-Performed Work	Contract Amount Completion Date % Self-Performed Work	Contract Amount Completion Date % Self-Performed Work	Contract Amount Completion Date % Self-Performed Work
PROJECT DELIVERY METHOD	☐ Design-bid-build ☐ Design-build ☐ CM constructor ☐ CM advisor ☐ Other:	☐ Design-bid-build ☐ Design-build ☐ CM constructor ☐ CM advisor ☐ Other:	☐ Design-bid-build ☐ Design-build ☐ CM constructor ☐ CM advisor ☐ Other:	☐ Design-bid-build ☐ Design-build ☐ CM constructor ☐ CM advisor ☐ Other:
SUSTAINABILITY CERTIFICATIONS				

Init.

/

AIA Document A305™ – 2020 Exhibit E. Copyright © 2020 by The American Institute of Architects. All rights reserved. The "American Institute of Architects," "AIA," the AIA Logo, and "AIA Contract Documents" are registered trademarks and may not be used without permissionThis document was created on 01/12/2021 14:53:27 under the terms of AIA Documents on Demand® Order No. 2010552756 , is not for resale, is licensed for one-time use only, and may only be used in accordance with the AIA Contract Documents® Documents-on-Demand – End User License Agreement. To report copyright violations, e-mail copyright@aia.org.

DocuSign Envelope ID: 8DBEB8AA-0E8A-4E60-958F-1F24043B8B5F

DocuSign Envelope ID: 8C8829B7-93A5-40A2-9DFD-ACDCBCE2BFC5

PERROTTO
BUILDERS, LTD.

GENERAL CONTRACTORS ■ Providing Quality Workmanship For Over 70 Years
426 WARREN STREET ■ READING, PA 19601 ■ PHONE: 610-374-9421 ■ FAX: 610-372-3603

Attachment "A"

AIA DOCUMENT A305-1986 CONTRACTOR'S QUALIFICATION STATEMENT

3.2.1 Has your organization ever failed to complete any work awarded to it?

Unfortunately, in the normal course of the construction business legal disputes sometimes arise. While it is impossible to avoid the spin off of unwanted legal disputes Perrotto proactively partners with law firms that help us resolve the disputes Perrotto encounters as quickly as possible and avoid any material impact on our construction operations. This also allows us to maintain positive Client and Subcontractor relations. Dispute resolution is a medium employed by most Clients in their contracts and we view the use of this medium as an effective way of resolving disputes while allowing the work to continue. It is also important to note that over the past four (4) years Perrotto has seen an increase in subcontractor defaults and payment bond claims as a direct result of the difficult economy which has impacted many construction companies in the area. This has unfortunately led to an increase in the number of disputes we have experienced but has never impacted our ability to complete our projects. Please note that several of the below listed items relate to a large project that had major design issues.

1. Red Rose Transit Authority (RRTA) – Queen Street Parking Garage

   Details: Perrotto did not "fail" to complete the project but nevertheless, discloses here that by letter dated October 26, 2011, the owner improperly terminated the contract with Perrotto. The termination was clearly improper as there was no material breach. At the time of the improper termination, Perrotto had not been paid for work completed in June, July, August and September, even though the owner's agents had certified and approved the payment applications. Before the termination, Perrotto had put the owner on notice of its breach in failing to make payments. It is important to note that a) Perrotto completed approximately 94% of the work at the time of the termination b) Perrotto was owed 1.3 million dollars for completed work for which the owner refused to release payment (June through September) and c) the work quality issues that the owner claimed necessitated the termination were minor in nature and related to design issues created by owner changes that Perrotto committed to resolve in writing to the owner. There is certainly more to this complicated story and Perrotto has authorized its attorney, Jason A. Copley to disclose information related to the dispute to you as a prospective client should you have any further questions or concerns. Jason is the Managing Partner of Cohen, Seglias, Pallas, Greenhall and Furman, P.C. and can be reached at 215-564-1700. Finally, Perrotto has completed over 250 million dollars' worth of work in the last 7 years and has never before been defaulted on a project

3.2.2 Are there any judgments, claims, arbitration proceedings or suits pending or outstanding against your organization or its officers?

<u>Pending or outstanding matters against Perrotto</u>

1. Red Rose Transit Authority Project

- RRTA v. Perrotto
  Details: See above response to Section 3.2.1. After Perrotto filed suit against RRTA for improperly terminating Perrotto, RRTA filed an action against Perrotto.

- The Charter Oak Fire Insurance Company v. Perrotto, et al.
  Details: This action was initiated by the insurance carrier for the Lancaster Museum. The Lancaster Museum was located next to the RRTA construction site reference above. On or about April of 2010, there was a partial collapse of the Museum while construction activities were being undertaken at the site. Specifically, Perrotto's subcontractors, Mar-Allen and B.R. Kreider, were working in the area adjacent to the collapse in accordance with the plans and specifications prepared by RRTA's professional, Tim Haas & Associates, and/or in accordance with plans that had been submitted and approved by Haas for the work.
  This action was instituted to recover damages from Perrotto and its Subcontractors related to payments made under a policy to the Museum. Perrotto insurance carrier is defending the lawsuit.

- Chowns Fabrication & Rigging, Inc. v. Perrotto
  Details: This is a subcontractor claim on the Red Rose Transit Authority project in which Chowns is seeking payment of funds that RRTA failed to pay to Perrotto. Perrotto has a pay-if-paid provision in its subcontract agreement which is a valid defense to this claim. Perrotto is working to get the dispute with RRTA resolved so that funds can be released to project subcontractors.

DocuSign Envelope ID: 8DBEB8AA-0E8A-4E60-958F-1F24043B8B5F

DocuSign Envelope ID: 8C8829B7-93A5-40A2-9DFD-ACDCBCE2BFC5

- B.R. Kreider & Son, Inc. v. Perrotto
  Details: This is a subcontractor claim on the Red Rose Transit Authority project in which B.R. Kreider is seeking payment of funds that RRTA failed to pay to Perrotto. Perrotto has a pay-if-paid provision in its subcontract agreement which is a valid defense to this claim. Nevertheless, Perrotto is working to get the dispute with the owner resolved so that funds can be released to project subcontractors. As described above, during the project there was a partial collapse of the adjacent, unoccupied building owned by the Lancaster Museum of Art. B.R. Kreider, Inc. may have had some involvement in the collapse and, as a result, this litigation involves issues relating to that collapse.

- Robert H. Kepler Masonry, Inc. v. Perrotto
  Details: This is a subcontractor claim on the Red Rose Transit Authority project in which Robert H. Kepler Masonry is seeking payment of funds that RRTA failed to pay to Perrotto. Perrotto has a pay-if-paid provision in its subcontract agreement which is a valid defense to this claim. Perrotto is working to get the dispute with RRTA resolved so that funds can be released to project subcontractors.

- Masco Builder Services Group, Inc. v. Perrotto
  Details: This is a subcontractor claim on the Red Rose Transit Authority and Lancaster County Administration Building projects in which Masco Builder Services Group is seeking payment of funds that the owners failed to pay to Perrotto. Perrotto has a pay-if-paid provision in its subcontract agreements which is a valid defense to this claim. Perrotto is working to get the dispute with the owners resolved so that funds can be released to project subcontractors.

- Millers Capital Ins. Co. v. Perrotto, et al.
  Details: This is a subrogation claim by the insurer of a flower shop neighboring the Lancaster Museum building, which claimed damage in the partial collapse.

- Red Rose Village of Lancaster v. Perrotto
  Details: This is a claim by a nightclub neighboring the Lancaster Museum building, which claimed loss of business as a result of the partial collapse.

2. Eastern Center for Arts & Technology

- JR Paving and Construction, Inc. v. Perrotto
  Details: This involves a claim that has been asserted by a sub-subcontractor, Penn Outdoor Services, LLC, against Perrotto's subcontractor, JR Paving, for payment for certain rain garden and landscaping work at the project. Perrotto paid JR Paving in accordance with the terms of its subcontract yet JR Paving is trying to hold Perrotto responsible for the claims of its sub-subcontractor. The amount at issue is approximately $12,000 and the matter is pending in Montgomery County Court of Common Pleas. At arbitration, Perrotto was found not to be liable for any portion of the claims and Perrotto was successful in its counterclaim against JR Paving.

DocuSign Envelope ID: 8DBEB8AA-0E8A-4E60-958F-1F24043B8B5F

DocuSign Envelope ID: 8C8829B7-93A5-40A2-9DFD-ACDCBCE2BFC5

PERROTTO BUILDERS, LTD.

GENERAL CONTRACTORS ■ Providing Quality Workmanship For Over 70 Years

426 WARREN STREET ■ READING, PA 19601 ■ PHONE: 610-374-9421 ■ FAX: 610-372-3603

EXHIBIT "B"
ATTACHMENT TO
CONTRACTOR'S QUALIFICATION STATEMENT

3.4 On a separate sheet, list major construction projects your organization has in progress, giving the name of project, owner, architect, contract amount, percent complete and scheduled completion date.

Conestoga High School Expansion—Additions & Renovations

Owner: Tredyffrin/Easton School District
940 West Valley Road
Suite 1700
Wayne, PA 19087
Frederic Gordon, Jr.
(610) 842-5032

Architect: Heckendorn Shiles Architects
347 E Conestoga Road
Wayne, PA 19087
David Farabaugh
(610) 944-3521

Original Contract Amount: $15,908,000.00
Change Order Amount: $368,238.63
Percent Complete: 97%
Start Date: April 2020
Scheduled Completion Date: November 2021
% complete with our own forces: 10%
Prime
Additions & Renovations

R4S Hemodialysis Relocation

Owner: Tower Health Group
6th & Spruce Street
Reading, PA 19601
Jennifer Bossler
610-988-4353

Architect: Nelson Worldwide
100 S. Independence Mall West
Suite 500
Philadelphia, PA 19106
Philip Buckley
215-825-6625

Original Contract Amount: $2,174,000.00
Change Orders to date: $61,057.61
Percent Complete: 95%
Start Date: October 2020
Scheduled Completion Date: June 2021
% Complete with your own forces: 10%

Parkland Bus Storage Building

Owner: Parkland School District
1210 Springhouse Road
Allentown, PA 18104
Dave Keppel

Architect: Spillman Farmer Architects
1720 Spillman Drive
Suite 200
Bethlehem, PA 18015
610-865-2621

Original Contract Amount: $1,283,000.00
Change Orders to date: $00.00
Percent Complete: 56%
Start Date: November 2020
Scheduled Completion Date: October 2021
% Complete with your own forces: 10%
Prime
Renovations

DocuSign Envelope ID: 8DBEB8AA-0E8A-4E60-958F-1F24043B8B5F

DocuSign Envelope ID: 8C8829B7-93A5-40A2-9DFD-ACDCBCE2BFC5

THRH N1 Peripheral Lab

Owner:	Tower Health Group 6th & Spruce Street Reading, PA 19601 Jennifer Bossler 610-988-4353	
Architect:	Ballinger 833 Chestnut Street Suite 1400 Philadelphia, PA 19107 Jacob Shoemaker 484-628-4353	
Original Contract Amount:		$1,129,000.00
Change Orders to date:		$00.00
Percent Complete:		31%
Start Date:		April 2021
Scheduled Completion Date:		August 2021
% Complete with your own forces:		10%

Conrad Weiser High School Additions & Renovations

Owner:	Conrad Weiser School District 44 Big Spring Road Robesonia, PA 19551 Eric Lutz 610-693-8507	
Architect:	Muhlenberg Greene Architects 955 Berkshire Blvd Suite 101 Wyomissing, PA 19610 610-376-4927	
Original Contract Amount:		$5,181,000.00
Change Orders to date:		$159,461.64
Percent Complete:		28%
Start Date:		April 2021
Scheduled Completion Date:		November 2021
% Complete with your own forces:		10%
Additions & Renovations		
Prime		

Easton-North 4th Street Parking Garage

Owner:	City of Easton 123 South Third Street Easton, PA 18042 David Hopkins	
Architect:	Alloy5 Architecture 530 West Broad Street Bethlehem, PA 18018	
Original Contract Amount:		$13,527,000.00
Change Orders to date:		$00.00
Percent Complete:		20%
Start Date:		April 2021
Scheduled Completion Date:		June 2022
% Complete with your own forces:		0%

Aronimink Elementary School Add's & Renovation

Owner:	Upper Darby School District 4611 Bond Ave Drexel Hill, PA 19026 John Ennis (610) 389-8303	
Architect:	KCBA 8 East Broad Street Hatfield, PA 19440 Laural Flacon (215) 368-5806	
Original Contract Amount:		$13,410,000.00
Change Orders to date:		$00.00
Percent Complete:		5%
Start Date:		June 2021
Scheduled Completion Date:		August 2023
% Complete with your own forces:		10%

DocuSign Envelope ID: 8DBEB8AA-0E8A-4E60-958F-1F24043B8B5F

DocuSign Envelope ID: 8C8829B7-93A5-40A2-9DFD-ACDCBCE2BFC5

Wyomissing Hills Elementary Center Adds & Reno's

Owner:	Wyomissing Area School District 630 Evans Ave Reading, PA 19610 Mike Cafoncelli (484) 532-6349	
Architect:	Crabtree, Rohrbaugh & Associates 401 East Winding Hill Road Mechanicsburg, PA 17055 Todd Vukmanic (717) 458-0272	
Original Contract Amount:		$7,123,000.00
Change Orders to date:		$00.00
Percent Complete:		4%
Start Date:		August 2021
Scheduled Completion Date:		August 2022
% Complete with your own forces:		10%

DocuSign Envelope ID: 8DBEB8AA-0E8A-4E60-958F-1F24043B8B5F

DocuSign Envelope ID: 8C8829B7-93A5-40A2-9DFD-ACDCBCE2BFC5

3.5 On a separate sheet, list the major projects your organization has completed in the past five years, giving the name of project, owner, architect, and contract amount, date of completion and percentage of the cost of the work performed with your own forces.

Valley Twp. New Admin & Police Facility

Owner:	Valley Township 890 West Lincoln Highway Coatesville, PA 19320 Janis Rambo 610-384-5751
Architect:	Kimmel Bogrette Architecture 151 E. 10th Avenue, Suite 300 Conshohocken, PA 19428 Andrew Dillon 610-834-7805
Overall Project size:	$5,942,100.00
Original Contract Amount:	$4,098,000.00
Change Orders to date:	$150,651.39
Percent Complete:	72%
Start Date:	October 2017
Scheduled Completion Date:	December 2019
% Complete with our own forces:	15%

Prime
New Construction
CPM

Pottstown Hospital Pharmacy Relocation

Owner:	Tower Health Group 6th & Spruce Street Reading, PA 19601 Mark Tipton 484-628-4970
Architect:	Ballinger Architects 833 Chestnut Street Suite 1400 Philadelphia, PA 19107 215-446-0900
Original Contract Amount:	$3,259,415.00
Change Orders to date:	$271,930.06
Percent Complete:	punchlist
Start Date:	May 2019
Scheduled Completion Date:	February 2020
% Complete with our own forces:	15%

Reading Surgical Center

Owner:	Surgical Institute of Reading 62752 Century Blvd Wyomissing, PA 19610 Sara Wicks 610-736-9909
Architect:	Kleckner Laucks Architects 2201 Ridgewood Road Suite 315 Wyomissing, PA 19610 Peter Laucks 610-939-9660
Original Contract Amount:	$465,000.00
Change Orders to date:	$62,957.00
Percent Complete:	punchlist
Start Date:	May 2019
Scheduled Completion Date:	February 2020
% Complete with our own forces:	15%

DocuSign Envelope ID: 8DBEB8AA-0E8A-4E60-958F-1F24043B8B5F

DocuSign Envelope ID: 8C8829B7-93A5-40A2-9DFD-ACDCBCE2BFC5

C1N Radiology Phase III Renovations

Owner:	Tower Health Group 6th & Spruce Street Reading, PA 19601 Jennifer Bossler 610-988-4353
Architect:	Ballinger Architects 833 Chestnut Street Suite 1400 Philadelphia, PA 19107 215-446-0900
Original Contract Amount:	$3,110,437.00
Change Orders to date:	$69,075.00
Percent Complete:	76%
Start Date:	September 2019
Scheduled Completion Date:	March 2020
% Complete with our own forces:	15%

DOB 120-130 Infectious Diseases Phase II

Owner:	Tower Health Group 6th & Spruce Street Reading, PA 19601 Justin Istense 6610-823-9585
Architect:	Watkins Architect 29 West Main Street Fleetwood PA 19522 John Watkins 610-944-5536
Original Contract Amount:	$776,731.00
Change Orders to date:	$64,955.11
Percent Complete:	61
Start Date:	February 2020
Scheduled Completion Date:	June 2020
% Complete with our own forces:	15%

VF113 Phase 4 Lower Level

Owner:	Tower Health Group 6th & Spruce Street Reading, PA 19601 Mark Tipton 484-628-4970
Architect:	Wulff Architects 1515 Locust Street 2nd Floor Philadelphia, PA 19102 215-985-0500
Original Contract Amount:	$584,700.00
Change Orders to date:	$19,786.51
Start Date:	February 2020
Scheduled Completion Date:	April 2020
% Complete with our own forces:	15%

Horsham Township Municipal Complex—New Construction & Reno

Owner:	Horsham Township 1025 Horsham Road Horsham, PA 19004 (215) 643-3131
Architect:	KCBA Eight East Broad Street Hatfield, PA 19440-2401 Melissa Murawsky 215-368-5806
Original Contract Amount:	$6,802,000.00
Change Order Amount:	$185,767.48
Percent Complete:	punchlist
Start Date:	September 2018
Scheduled Completion Date:	October 2019
% complete with our own forces:	10%

Prime
New Construction & Renovations

DocuSign Envelope ID: 8DBEB8AA-0E8A-4E60-958F-1F24043B8B5F

DocuSign Envelope ID: 8C8829B7-93A5-40A2-9DFD-ACDCBCE2BFC5

Schuylkill County Human Service Building—Renovations

Owner: The Board of Commissioners of the County of Schuylkill
401 N. 2nd Street
Pottsville, PA 17901
(215) 643-3131

Architect: Y. Kim Architects
729 W. Market Street
Pottsville, PA 17901
Yongcheol Kim
(570) 628-4584

Original Contract Amount: $754,113.00
Change Order Amount: $279,559.55
Percent Complete: punchlist
Start Date: September 2018
Scheduled Completion Date: October 2019
% complete with our own forces: 10%
Prime
Renovations

TH MRI/Linac

Owner: Tower Health Group
6th & Spruce Street
Reading, PA 19601
Jennifer Bossler
610-988-4353

Architect: Ballinger Architects
833 Chestnut Street
Suite 1400
Philadelphia, PA 19107
215-446-0496

Original Contract Amount: $948,000.00
Change Orders to date: $106,749.19
Start Date: April 2019
Scheduled Completion Date: January 2020
% Complete with our own forces: 15%

Spring-Ford Senior High School—Additions & Alterations

Owner: Spring-Ford Area School District
833 South Lewis Road, Bldg. #1
Royersford, PA 19468

Architect: Crabtree Rohrbaugh Associates
401 E. Winding Hill Road
Mechanicsburg, PA 17055

Overall Project Size: $9,374,250.00
Original Contract Amount: $6,465,000.00
Change Order Amount: $128,249.55
Start Date: May 2018
Scheduled Completion Date: July 2019
% complete with our own forces: 10%
Prime
Additions & Alterations
CPM Schedule

RHTH ED PEDS III

Owner: Tower Health Group
6th & Spruce Street
Reading, PA 19601
Jennifer Bossler
610-988-4353

Architect: Ballinger Architects
833 Chestnut Street
Suite 1400
Philadelphia, PA 19107
215-446-0900

Original Contract Amount: $502,000.00
Change Orders to date: $00.00
Start Date: April 2019
Scheduled Completion Date: September 2019
% Complete with our own forces: 15%

DocuSign Envelope ID: 8DBEB8AA-0E8A-4E60-958F-1F24043B8B5F

DocuSign Envelope ID: 8C8829B7-93A5-40A2-9DFD-ACDCBCE2BFC5

Franklin Labs—Phase II

Owner: Franklin Labs, LLC
637 Zurich Drive
Hummelstown, PA 17035

Architect: Kleckner Laucks Architects, PC
18 Catherine Street
Shillington, PA 19607
David Kleckner
610-939-9660

Original Contract Amount: $1,463,000.00
Change Order Amount: $00.00
Percent Complete: 22%
Start Date: April 2018
Scheduled Completion Date: July 2018
% complete with our own forces: 20%

RHTH ED PEDS

Owner: Tower Health Group
6th & Spruce Street
Reading, PA 19601
Jennifer Bossler
610-988-4353

Architect: Ballinger Architects
833 Chestnut Street
Suite 1400
Philadelphia, PA 19107
215-446-0900

Original Contract Amount: $1,446,000.00
Change Orders to date: $156,017.80
Percent Complete: 69%
Start Date: August 2018
Scheduled Completion Date: December 2018
% Complete with our own forces: 15%

Dauphin County Health & Human Services Building –Renovation

Owner: Dauphin County Commissioners
Dauphin Courthouse, Room 106
101 Market Street
Harrisburg, PA 17101
Edger Cohen
717-780-6327

Architect: Herbert, Rowland & Grubic, Inc.
369 East Park Drive
Harrisburg, PA 17111
Erin Letavic, P.E.
717-564-1121

Overall Project Size: $1,494,950.00
Original Contract Amount: $1,031,000.00
Change Order Amount: $106,147.16
Percent Complete: punchlist
Start Date: April 2018
Scheduled Completion Date: September 2018
% complete with our own forces: 10%
Prime
Renovations
CPM Schedule

RHTH CIN Radiology

Owner: Tower Health Group
6th & Spruce Street
Reading, PA 19601
Jennifer Bossler
610-988-4353

Architect: Ballinger Architects
833 Chestnut Street
Suite 1400
Philadelphia, PA 19107
215-446-0900

Original Contract Amount: $633,800.00
Change Orders to date: $46,110.41
Start Date: July 2018
Scheduled Completion Date: November 2018
% Complete with our own forces: 15%

DocuSign Envelope ID: 8DBEB8AA-0E8A-4E60-958F-1F24043B8B5F

DocuSign Envelope ID: 8C8829B7-93A5-40A2-9DFD-ACDCBCE2BFC5

Whitehall-Coplay Middle School Alterations

Owner: Whitehall-Coplay School District
2940 MacArthur Road
Whitehall, PA 18052
Philip Bankos, Supervisor of Buildings/Grounds
610-439-0110 ext. 1153

Architect: Breslin Ridyardo Fadero Architects
1226 Union Blvd
Allentown, PA 18109
Kevin Miller,
610-437-9626

Overall Project Size:	$2,692,650.00
Original Contract Amount:	$1,857,000.00
Change Order Amount:	$00.00
Percent Complete:	punchlist
Start Date:	May 15, 2018
Scheduled Completion Date:	August 20, 2018
% complete with our own forces:	5%

Prime
Alterations
CPM Schedule

THGH T1-Bi-Plane--Construction

Owner: Tower Health Group
6th & Spruce Street
Reading, PA 19601
Dave Major
484-628-4351

Architect: Ballinger Architects
833 Chestnut Street
Suite 1400
Philadelphia, PA 19107
215-446-0900

Original Contract Amount:	$2,395,000.00
Change Orders to date:	$00.00
Start Date:	April 2018
Scheduled Completion Date:	June 2018
% Complete with our own forces:	15%

RHTH C1 Radiology Room # 4

Owner: Tower Health Group
6th & Spruce Street
Reading, PA 19601
Jennifer Bossler
610-988-4353

Architect: Ballinger Architects
833 Chestnut Street
Suite 1400
Philadelphia, PA 19107
215-446-0900

Original Contract Amount:	$183,800.00
Change Orders to date:	$00.00
Percent Complete:	80%
Start Date:	July 2018
% Complete with our own forces:	15%

Berks County Health Center—Renovations

Owner: Reading Health Systems
6th & Spruce Street

Reading, PA 19601
Jennifer Bossler
610-988-4353

Architect: Olsen Design Group
2345 Bernville Road
Reading, PA 19605
610-371-9606

Original Contract Amount:	$309,001.00
Change Orders to date:	$3,558.88
Start Date:	July 2017
Scheduled Completion Date:	June 2018
% Complete with our own forces:	15%

DocuSign Envelope ID: 8DBEB8AA-0E8A-4E60-958F-1F24043B8B5F

DocuSign Envelope ID: 8C8829B7-93A5-40A2-9DFD-ACDCBCE2BFC5

RHTH B1-MRI

Owner:	Reading Health Systems 6th & Spruce Street Reading, PA 19601 Jennifer Bossler 610-988-4353
Architect:	Ballinger Architects 833 Chestnut Street Suite 1400 Philadelphia, PA 19107 215-446-0900
Original Contract Amount:	$384,480.00
Change Orders to date:	$00.00
Start Date:	May 2018
Scheduled Completion Date:	June 2018
% Complete with our own forces:	15%

Coordinated Health Hazleton MOB &ASC—Change Order 1

Owner:	Macada Properties Management 3435 Winchester Rd/Suite 101 Allentown, PA 18104 Tom Sparling 610-861-8080 Ext 25296
Architect:	Kleckner Laucks Architects, PC 18 Catherine Street Shillington, PA 19607 David Kleckner 610-939-9660
Original Contract Amount:	$9,800,000.00
Change Orders to date:	$3,759,960.00
Percent Complete:	30%
Start Date:	March 2017
Scheduled Completion Date:	November 2018
% complete with our own forces:	15%
New Construction	

Coordinated Health Phillipsburg ASC—New Construction

Owner:	Macada Properties Management 3435 Winchester Rd/Suite 101 Allentown, PA 18104 Tom Sparling 610-861-8080 Ext 25296
Architect:	BDA Architects 1 West Broad Street Suite 104 Allentown, PA 18104 Nathan Nance 610-625-0096
Original Contract Amount:	$9,770,427.00
Change Orders to date:	$678,001.54
Start Date:	February 2017
Scheduled Completion Date:	April 2018
% complete with our own forces:	15%
New Construction	

Franklin Labs-Phase I

Owner:	Franklin Labs, LLC 637 Zurich Drive Hummelstown, PA 17035
Architect:	Olsen Design Group
Original Contract Amount:	Cost plus 3% ($3-$6 Million)
Start Date:	November 2017
Scheduled Completion Date:	June 2018
% Complete with our own forces:	10%
Renovations	

DocuSign Envelope ID: 8DBEB8AA-0E8A-4E60-958F-1F24043B8B5F

DocuSign Envelope ID: 8C8829B7-93A5-40A2-9DFD-ACDCBCE2BFC5

Coordinated Health Hazleton MOB &ASC

Owner: Macada Properties Management
3435 Winchester Rd/Suite 101
Allentown, PA 18104
Tom Sparling
610-861-8080 Ext 25296

Architect: Kleckner Laucks Architects, PC
18 Catherine Street
Shillington, PA 19607
David Kleckner
610-939-9660

Original Contract Amount:	$12,300,000.00
Change Orders to date:	$3,701,676.71
Start Date:	August 2016
Scheduled Completion Date:	April 2018
% complete with our own forces:	15%

New Construction

Albright Baseball Field

Owner: Albright College
1621 N. 13th Street
Reading, PA 19612
Josh Williams
610-921-7899

CM: Aurora Architecture
1871 Harmonyville Road
Pottstown, PA 19456
David Settle
610-469-1796

Architect: Kleckner Laucks Architects, PC
18 Catherine Street
Shillington, PA 19607
David Kleckner
610-939-9660

Original Contract Amount:	$231,000.00
Change Orders to date:	$6,942.41
Percent Complete:	100%
Start Date:	November 2017
Scheduled Completion Date:	April 2018
% complete with our own forces:	40%

New Construction

Reading Health System—Infusion Bay--Renovations

Owner: Reading Health Systems
6th & Spruce Street
Reading, PA 19601
Jennifer Bossler
610-988-4353

Architect: Ballinger Architects
833 Chestnut Street
Suite 1400
Philadelphia, PA 19107
215-446-0900

Original Contract Amount:	$34,564.00
Change Orders to date:	$00.00
Start Date:	February 2018
Scheduled Completion Date:	February 2018
% Complete with our own forces:	15%

Renovations

Lower Moreland Township School District--Renovations

Owner: Lower Moreland Township School District
2552 Murray Avenue
Huntingdon Valley, PA 19006
John Strobel

Architect: Breslin Ridyardo Fadero Architects
1226 Union Blvd
Allentown, PA 18109
Kevin Miller,
610-437-9626

Overall Project Size:	$2,127,585.00
Original Contract Amount:	$1,467,300.00
Change Orders to date:	$43,067.79
Percent Complete:	100%
Start Date:	June 2017
Scheduled Completion Date:	December 2017
% complete with our own forces:	5%

Prime
Renovations
CPM

DocuSign Envelope ID: 8DBEB8AA-0E8A-4E60-958F-1F24043B8B5F

DocuSign Envelope ID: 8C8829B7-93A5-40A2-9DFD-ACDCBCE2BFC5

Millersville University—Lombardo Welcome Center

Owner: Millersville University
153 Creek Drive
Millersville, PA 17551
Steve Strock
717-871-7323

Architect: Spillman Farmer Architects
1720 Spillman Drive Suite 200
Bethlehem, PA 18015
Salvatore Verrastro
610-865-2621

Over All Project Size:	$5,453,450.00
Original Contract Amount:	$3,761,000.00
Change Orders to date:	$146,238.41
Start Date:	January 2017
Scheduled Completion Date:	January 2018
% complete with our own forces:	10%

CCIU Pickering Campus Renovations

Owner: Chester County Intermediate Unit
455 Boot Road
Downingtown, PA 19335
Paul Thompson, Jr/ Joseph Lubitsky
610-383-5439

Architect: Breslin Ridyardo Fadero Architects
1226 Union Blvd
Allentown, PA 18109
Kevin Miller,
610-437-9626

Overall Project Size:	$13,486,595.00
Original Contract Amount:	$9,301,100.00
Change Orders to date:	$668,817.65
Start date:	February 2016
Scheduled Completion Date:	October 2017
% complete with our own forces:	15%

Prime
Renovations
CPM Scheduling

Reading Health System—C3 Lab Phase 2 Renovations

Owner: Reading Health Systems
6th & Spruce Street
Reading, PA 19601
Jennifer Bossler
610-988-4353

Architect: Ballinger Architects
833 Chestnut Street
Suite 1400
Philadelphia, PA 19107
Karen Brooks
215-446-0900

Original Contract Amount:	$6,870,000.00
Change Orders to date:	$1,357,759.76
Start Date:	December 2014
Scheduled Completion Date:	June 2017
% Complete with our own forces:	15%

YMCA Dinning Hall—Phase I --Renovations

Owner: South Mountain YMCA
PO Box 147
Wernersville, PA 19565
Nathan Brant
610-670-2267

Architect: Masano Architects Group, Inc
855 Berkshire Blvd
Suite 102
Wyomissing, PA 19610
Thom Masano
610-376-4699

Original Contract Amount:	$837,755.00
Change Orders to date:	$9,911.85
Start Date:	January 2017
Scheduled Completion Date:	May 2017
% complete with our own forces:	90%

Renovation

DocuSign Envelope ID: 8DBEB8AA-0E8A-4E60-958F-1F24043B8B5F

DocuSign Envelope ID: 8C8829B7-93A5-40A2-9DFD-ACDCBCE2BFC5

Conestoga Elementary School—Additions & Renovations

Owner:	Penn Manor School District 2650 Charlestown Road Lancaster, PA 17603 Denny Coleman 717-201-9938
Architect:	Crabtree Rohrbaugh Associates 401 E. Winding Hill Road Mechanicsburg, PA 17055 Larry Levato 717-458-0272
Overall Project Size:	$8,613,000.00
Original Contract Amount:	$5,940,000.00
Change Orders to date:	$380,949.66
Percent Complete:	punchlist
Start Date:	July 2016
Scheduled Completion Date:	July 2017
% complete with our own forces:	15%

Prime
Additions & Renovations
CPM Schedule

Rockland Center—Albright Dorms—New Construction

Owner:	Radkra, LLC c/o 426 Warren Street Reading, PA 19601
Architect:	Kleckner Laucks Architects, PC 18 Catherine Street Shillington, PA 19607 David Kleckner 610-939-9660
Original Contract Amount:	$12,577,000.00
Change Orders to date:	$0.00
Start Date:	September 2016
Scheduled Completion Date:	August 2017
% complete with our own forces:	15%

New Construction

RHS B3S Medical Library

Owner:	Reading Health Systems 6th & Spruce Street Reading, PA 19601 Jennifer Bossler 610-988-4353
Architect:	Ballinger Architects 833 Chestnut Street Suite 1400 Philadelphia, PA 19107 Karen Brooks 215-446-0900
Original Contract Amount:	$948,000.00
Change Orders to date:	$316,666.39
Percent Complete:	80%
Start date:	July 2016
Schedule Completion Date:	May 2017
% complete with our own forces:	15%

Renovations

RHS Retail Pharmacy

Owner:	Reading Health Systems 6th & Spruce Street Reading, PA 19601 Jennifer Bossler 610-988-4353
Architect:	Ballinger Architects 833 Chestnut Street Suite 1400 Philadelphia, PA 19107 Karen Brooks 215-446-0900
Original Contract Amount:	$218,700.00
Change Orders to date:	$61,946.77
Start date:	September 2016
Schedule Completion Date:	February 2017
% complete with our own forces:	15%

New work to existing building

DocuSign Envelope ID: 8DBEB8AA-0E8A-4E60-958F-1F24043B8B5F

DocuSign Envelope ID: 8C8829B7-93A5-40A2-9DFD-ACDCBCE2BFC5

Reading Health System – 7th Avenue Building – Suite Package #200.1

Owner:	Reading Health Systems 6th & Spruce Street Reading, PA 19601 Jennifer Bossler 610-988-4353
Architect:	Ballinger Architects 833 Chestnut Street Suite 1400 Philadelphia, PA 19107 Karen Brooks 215-446-0900
CM:	L.F. Driscoll Co. 615 Kenhorst Boulevard Reading, PA 19601 Nick Fazzini, 484-509-2076 x 104
Overall Project Size:	$6,355,521.00
Original Contract Amount:	$1,296,781.00
Change Orders to date:	$397,697.00
Percent Complete:	punchlist
Start Date:	June 2015
Schedule Completion Date:	September 2016
% Complete with our own forces:	10%
Renovations	

Reading Health System – 7th Avenue Building – Suite Package #200.2

Owner:	Reading Health Systems 6th & Spruce Street Reading, PA 19601 Jennifer Bossler 610-988-4353
Architect:	Ballinger Architects 833 Chestnut Street Suite 1400 Philadelphia, PA 19107 Karen Brooks 215-446-0900
CM:	L.F. Driscoll Co. 615 Kenhorst Boulevard Reading, PA 19601 Nick Fazzini, 484-509-2076 x 104
Overall Project Size:	$6,355,521.00
Original Contract Amount:	$694,629.00
Change Orders to date:	($411.00)
Percent Complete:	punchlist
Start Date:	June 2015
Schedule Completion Date:	September 2016
% Complete with our own forces:	10%
Renovations	

Reading Health System – 7th Avenue Building – Suite Package #200.3

Owner:	Reading Health Systems 6th & Spruce Street Reading, PA 19601 Jennifer Bossler 610-988-4353
Architect:	Ballinger Architects 833 Chestnut Street Suite 1400 Philadelphia, PA 19107 Karen Brooks 215-446-0900
CM:	L.F. Driscoll Co. 615 Kenhorst Boulevard Reading, PA 19601 Nick Fazzini, 484-509-2076 x 104
Overall Project Size:	$6,355,521.00
Original Contract Amount:	$676,683.00
Change Orders to date:	($596.00)
Percent Complete:	punchlist
Start Date:	June 2015
Schedule Completion Date:	September 2016
% Complete with our own forces:	10%
Renovations	

DocuSign Envelope ID: 8DBEB8AA-0E8A-4E60-958F-1F24043B8B5F

DocuSign Envelope ID: 8C8829B7-93A5-40A2-9DFD-ACDCBCE2BFC5

Reading Health System – 7th Avenue Building – Suite Package #200.6

Owner:	Reading Health Systems 6th & Spruce Street Reading, PA 19601 Jennifer Bossler 610-988-4353
Architect:	Ballinger Architects 833 Chestnut Street Suite 1400 Philadelphia, PA 19107 Karen Brooks 215-446-0900
CM:	L.F. Driscoll Co. 615 Kenhorst Boulevard Reading, PA 19601 Nick Fazzini, 484-509-2076 x 104
Overall Project Size:	$6,355,521.00
Original Contract Amount:	$972,947.00
Change Orders to date:	$6,654.00
Percent Complete:	99%
Start Date:	June 2015
Schedule Completion Date:	September 2016
% Complete with our own forces:	10%
Renovations	

Reading Health System – 7th Avenue Building – Suite Package #200.7

Owner:	Reading Health Systems 6th & Spruce Street Reading, PA 19601 Jennifer Bossler 610-988-4353
Architect:	Ballinger Architects 833 Chestnut Street Suite 1400 Philadelphia, PA 19107 Karen Brooks 215-446-0900
CM:	L.F. Driscoll Co. 615 Kenhorst Boulevard Reading, PA 19601 Nick Fazzini, 484-509-2076 x 104
Overall Project Size:	$6,355,521.00
Original Contract Amount:	$595,974.00
Change Orders to date:	$80.00
Percent Complete:	punchlist
Start Date:	June 2015
Schedule Completion Date:	September 2016
% Complete with our own forces:	10%
Renovations	

Reading Health System – 7th Avenue Building – Suite Package #200.8

Owner:	Reading Health Systems 6th & Spruce Street Reading, PA 19601 Jennifer Bossler 610-988-4353
Architect:	Ballinger Architects 833 Chestnut Street Suite 1400 Philadelphia, PA 19107 Karen Brooks 215-446-0900
CM:	L.F. Driscoll Co. 615 Kenhorst Boulevard Reading, PA 19601 Nick Fazzini, 484-509-2076 x 104
Overall Project Size:	$6,355,521.00
Original Contract Amount:	$648,232.00
Change Orders to date:	$2,955.00
Percent Complete:	punchlist
Start Date:	June 2015
Schedule Completion Date:	September 2016
% Complete with our own forces:	10%
Renovations	

DocuSign Envelope ID: 8DBEB8AA-0E8A-4E60-958F-1F24043B8B5F

DocuSign Envelope ID: 8C8829B7-93A5-40A2-9DFD-ACDCBCE2BFC5

Millersburg Area High School – Middle School

Owner:	Millersburg Area School District 799 Center Street Millersburg, PA 17601 Gary Stoneroad 717-692-2108
Architect:	Crabtree, Rohrbaugh & Associates 401 E. Winding Hill Road Mechanicsburg, PA 17055 Bob Nesbit 717-458-0272
Overall Project Size:	$1,736,520.00
Original Contract Amount:	$1,197,600.00
Change Orders to date:	$59,479.39
Percent Complete:	punchlist
Start Date:	July 2015
Schedule Completion Date:	August 2016
% complete with our own forces:	15%
Prime Contractor	
Additions & Renovations	
CPM Scheduling	

Kutztown Area High School – Additions and Renovations

Owner:	Kutztown Area School District 251 Long Lane Kutztown, PA 19530 David Miller
Architect:	AEM Architects, Inc. 3700 Perkiomen Avenue Reading, PA 19606 Justin Istenes, 610-779-3220
Overall Project Size:	$7,451,405.00
Original Contract Amount:	$5,138,900.00
Change Orders to date:	($17,950.00)
Percent Complete:	punchlist
Start Date	November 2015
Schedule Completion Date:	October 2016
% complete with our own forces	25%
Prime Contractor	
Additions & Renovations	
CPM Scheduling	

Manheim Police Station

Owner:	Manheim Borough 15 East High Street Manheim, PA 17545 Jim Fisher 717-665-2461
Architect:	De Vitry Architects 237 N. Prince Street, Suite 210 Lancaster, PA 17603 Pete deVitry 717-393-7512
Original Contract Amount:	$2,981,200.00
Change Orders to date:	$23,324.94
Start date:	January 2016
Schedule Completion Date:	December 2016
% complete with our own forces:	20%
Prime Contractor	
New Construction	
CPM Scheduling	

DocuSign Envelope ID: 8DBEB8AA-0E8A-4E60-958F-1F24043B8B5F

DocuSign Envelope ID: 8C8829B7-93A5-40A2-9DFD-ACDCBCE2BFC5

Coatesville 9/10 Center Renovations

Owner:	Coatesville Area School District 3030 C G Zine Road Thorndale, PA 19372 Jason Palaia 610-466-2431
Architect:	Schrader Group Architecture 161 Leverington Avenue Suite 105 Philadelphia, PA 19127 Monique McCray 215-482-7440
Overall Project Size:	$422,240.00
Original Contract Amount:	$291,200.00
Change Orders to date:	$11,063.32
Percent Complete:	100%
Start Date:	June 2016
Schedule Completion Date:	September 2016
% Complete with our own forces:	10%

Prime
Renovations
CPM Scheduling

ECAT 2016 Veterinary Science Building Renovation & Main Building Improvements

Owner:	Eastern Center for Arts and Technology 3075 Terwood Road Willow Grove, PA 19090 Irene Dickinson 215-784-4800
Architect:	GKO 12 East Butler Avenue Suite 205 Ambler, PA 19002 Kathleen McConnell 215-646-2003
Overall Project Size:	$1,244,535.00
Original Contract Amount:	$858,300.00
Change Orders to date:	$14,269.80
Schedule Completion Date:	August 2016
% complete with our own forces:	20%

Prime
Renovations & Improvements
CPM Scheduling

Downingtown New Intermediate School

Owner:	Downingtown Area School District 540 Trestle Place Downingtown, PA 19335 Joe Fraim 610-269-8460
Architect	Hayes Large Architects 3601 Fifth Avenue Altoona, PA 16602 Matt Luttrel, 814-946-0451
Overall Project Size	$32,000,000.00
Original Contract Amount:	$18,574,000.00
Change Order Amount:	$383,142.96
Schedule Completion Date:	August 2014
% of work performed with own forces:	15%

Prime
New Construction
CPM Scheduling

DocuSign Envelope ID: 8DBEB8AA-0E8A-4E60-958F-1F24043B8B5F

DocuSign Envelope ID: 8C8829B7-93A5-40A2-9DFD-ACDCBCE2BFC5

LCCTC Mount Joy Campus Renovations

Owner:	Lancaster County Career & Technical Centers, Other 1730 Hans Herr Drive, PO Box 527 Willow Street, PA 17584 Tim Pope 717-464-7050
Architect	GKO, LLC 12 East Butler Avenue, Suite 205 Ambler, PA 19002 Dale Leatherman 215-646-2003
Overall Project Size:	$2,784,000.00
Original Contract Amount:	$1,920,000.00
Change Order Amount:	($96,646.86)
Schedule Completion Date:	August 20, 2015
% of work performed with own forces:	25%

Prime
Renovations
CPM Scheduling

Renaissance Academy Charter School—Additions & Renovations

Owner:	Renaissance Academy Charter School 40 Pine Crest Street Phoenixville, PA 19460 Carol Shaeffer 610-256-4125
Architect:	KCBA Architects, Inc Eight East Broad Street Hatfield, PA 19440-2401 Mark Marella 215-368-5806
CM:	Reynolds Construction, LLC 1265 Drummers Lane, Suite 104 Wayne, PA 19087 Bill MacLaughlin 610-688-6010
Overall Project Size:	$17,179,600.00
Original Contract Amount:	$11,848,000.00
Change Order Amount:	$591,497.53
Schedule Completion Date:	April 2015
% of work performed with own forces:	15%

Prime
Additions & Renovations
CPM Scheduling

Muhlenberg High School A-Wing – Renovations

Owner:	Muhlenberg School 801 Bellevue Avenue Laureldale, PA 19605 Greg Schneider 610-921-8000
Architect:	Muhlenberg Greene Architects, Ltd. 400 Washington Street, Suite 1000 Reading, PA 19601 John Hill 610-376-4927
Overall Project Size:	$818,525.00
Original Contract Amount:	$564,500.00
Change Order Amount:	$13,749.29
Date of Completion:	August 18, 2014
% of work performed with own forces:	20%

Prime
Renovations
CPM Scheduling

DocuSign Envelope ID: 8DBEB8AA-0E8A-4E60-958F-1F24043B8B5F

DocuSign Envelope ID: 8C8829B7-93A5-40A2-9DFD-ACDCBCE2BFC5

East Bradford Elementary School

Owner: West Chester School District
1181 McDermott Drive
West Chester, PA 19380
Kevin Campbell
484-266-1250

Architect: Blackney Hayes Architects
150 S. Independence Mall West, Suite 1200
Public Ledger Building
Philadelphia, PA 19106
Troy Hill
215-829-0922 ext. 131

Overall Project Size: $5,829,725.00
Original Contract Amount: $4,020,500.00
Change Order Amount: $233,350.70
Date of Completion: September 30, 2014
% of work performed with own forces: 10%
Prime
Additions & Renovations
CPM Scheduling

Westtown Thornbury Elementary School—Renovations & Additions

Owner: West Chester Area School District
1181 McDermott Drive
West Chester, PA 19380
Tim Burns
484-266-1281

Architect: KCBA Architects
8 East Broad Street
Hatfield, PA 19440
Scott Kalner,
215-368-5806

Overall Project Size: $6,629,748.00
Original Contract Amount: $4,572,240.00
Changer Order Amount: $125,096.36
Date of Completion: August 23, 2013
% of work performed with own forces: 5%
Prime
Additions & Renovations
CPM Scheduling

Conrad Weiser East Elementary School Alterations & Upgrades

Owner: Conrad Weiser School District
44 Big Spring Road
Robesonia, PA 19551

Architect: Muhlenberg Greene Architects, Ltd
400 Washington Street
Suite 1000
Reading, PA 19601

Overall Project Size: $1,008,765.00
Original Contract Amount: $695,700.00
Change Order Amount: $2,908.55
Date of Completion: August 30, 2013
% of work performed with own forces: 5%
Primes
Alterations & Upgrades
CPM Scheduling

Lebanon Sr. High School Additions & Renovations

Owner: Lebanon School District
1000 S. Eight Street
Lebanon, PA 17042
Dr. Marianne Bartley
717-273-9391

Architect: Beers & Hoffman Ltd
20-A East Roseville Road
Lancaster, PA 17601
Robert Hoffman
717-569-4955

Overall Project Size: $16,124,000.00
Original Contract Amount: $11,123,000.00
Change Order Amount: $3,057,292.33
Date of Completion: February 2013
LEED Project
% of work performed with own forces: 5%
Prime
Additions & Renovations
CPM Scheduling

DocuSign Envelope ID: 8DBEB8AA-0E8A-4E60-958F-1F24043B8B5F

DocuSign Envelope ID: 8C8829B7-93A5-40A2-9DFD-ACDCBCE2BFC5

Chester County Technical College High School—Brandywine Campus

Owner:	Chester County Intermediate Unit 455 Boot Road Downingtown, PA 19335 Paul Thompson, Jr/ Joseph Lubitsky 610-383-5439
Architect:	Breslin Ridyardo Fadero Architects 1226 Union Blvd Allentown, PA 18109 Kevin Miller, 610-437-9626
Overall Project Size:	$19,865,000.00
Original Contract Amount:	$13,700,000.00
Change Order Amount:	$857,384.00
Date of Completion:	July 31, 2012
% of work performed with own forces:	5%

Prime
Additions & Renovations
CPM Scheduling

Thaddeus Stevens College—Upgrade to Branch Campus

Owner:	Thaddeus Stevens Foundation 740 East End Avenue Lancaster, PA 17602 Alex B Munro, 717-295-9666
Architect:	MM Architects 103 South Duke Street Lancaster, PA 17602 Carl J. Kowalski, 717-393-3211
Overall Project Size:	$5,717,350.00
Original Contract Amount:	$3,943,000.00
Change Order Amount:	$446,762.19
Date of Completion:	January 29, 2013
% of work performed with own forces:	2%

Prime
Renovations

Council Rock Sidewalk Repairs

Owner:	Council Rock School District The Chancellor Center 30 N. Chancellor Street Newtown, PA 18940
Architect:	Godshall Kane O'Rourke Architects, LLC 12 East Butler Avenue, Suite 205 Ambler, PA 19002
Original Contract Amount:	$78,500.00
Change Order Amount:	$00.00
Schedule Completion Date:	August 25, 2015
% of work performed with own forces:	40%

Council Rock Modular Classroom Removal

Owner:	Council Rock School District The Chancellor Center 30 N. Chancellor Street Newtown, PA 18940
Architect:	Godshall Kane O'Rourke Architects, LLC 12 East Butler Avenue, Suite 205 Ambler, PA 19002
Overall Project Size:	$406,435.00
Original Contract Amount:	$280,300.00
Change Order Amount:	($26,885.00)
Schedule Completion Date:	August 25, 2015
% of work performed with own forces:	30%

Prime

DocuSign Envelope ID: 8DBEB8AA-0E8A-4E60-958F-1F24043B8B5F

DocuSign Envelope ID: 8C8829B7-93A5-40A2-9DFD-ACDCBCE2BFC5

Albright College White Chapel Demolition & Infrastructure Improvements

Owner:	Albright College 1801 North 12th Street, PO Box 15234 Reading, PA 19616-5234
Architect:	Aurora Architecture 1871 Harmonyville Road Pottstown, PA 19465 David M. Settle 610-469-1796
Contract Amount:	$348,000.00
Schedule Completion Date:	September 10, 2015
% of work performed with own forces:	20%

Prime
Demo & Renovations

East Whiteland Township Public Works – New Public Works Facility

Owner:	East Whiteland Township 209 Conestoga Road Frazer, PA 19355-1699 Terry H. Woodman 610-648-0600 x205
Architect	Bernardon Haber Holloway 425 McFarlan Road, Suite 200 Kennett Square, PA 19348 Stephen J. Behrens 610-444-2900
Overall Project Size:	$6,643,900.00
Original Contract Amount:	$4,582,000.00
Change Order Amount:	$80,849.00
Schedule Completion Date:	August 2015
% of work performed with own forces:	20%

Prime
New Construction

Renaissance Academy Charter School – Sitework Construction Package

Owner:	Renaissance Academy Charter School 40 Pine Crest Street Phoenixville, PA 19460 Carol Shaeffer 610-256-4125
Architect:	KCBA Architects, Inc Eight East Broad Street Hatfield, PA 19440-2401 Mark Marella 215-368-5806
CM:	Reynolds Construction, LLC 1265 Drummers Lane, Suite 104 Wayne, PA 19087 Bill MacLaughlin 610-688-6010
Overall Project Size:	$1,572,380.00
Contract Amount:	$1,184,400.00
Change Order Amount:	$107,603.45
Schedule Completion Date:	September 2015
% of work performed with own forces:	10%

Prime

Reading Health System – Medical Oncology Pharmacy

Owner:	Reading Health Systems 6th & Spruce Street Reading, PA 19601 Jennifer Bossler 484-628-4353
Architect:	Noelker and Hull Associates, Inc. 30 West King Street Chambersburg, PA 17201 717-263-8464
Original Contract Amount:	$582,704.00
Change Orders to date:	$00.00
Start Date:	January 2016
Schedule Completion Date:	May 2016
% complete with our own forces:	15%

DocuSign Envelope ID: 8DBEB8AA-0E8A-4E60-958F-1F24043B8B5F

DocuSign Envelope ID: 8C8829B7-93A5-40A2-9DFD-ACDCBCE2BFC5

Women's Health Center

Owner: Macadia Properties Management
3435 Winchester Rd/Suite 101
Allentown, PA 18104
Michael Campian
484-794-0300

Architect: BDA Architects
1 West Broad Street Suite 104
Allentown, PA 18104
Nathan Nance
610-625-0096

Original Contract Amount:	$1,200,137.00
Change Orders to date:	$00.00
Start date:	February 2016
Scheduled Completion Date:	August 2016
% complete with our own forces:	15%

Prime
Renovations

Colarusso Residence

Owner: Dr. Patrick Colarusso
5064 Cherrywood Drive
Mohnton, PA

Architect: Kleckner Laucks Architects, PC
18 Catherine Street
Shillington, PA 19607
David M. Kleckner,
610-939-9660

Contract Amount:	$T & M
Change Orders to date:	n/a
Start Date:	September 2015
Schedule Completion Date:	May 2016
% complete with our own forces:	15%

Reading Health System – Medical Oncology Renovation

Owner: Reading Health Systems
6th & Spruce Street
Reading, PA 19601
Jennifer Bossler,
484-628-4353

Architect: Ewing Cole
Federal Reserve Bank
100 North 6th Street
Independence Mall West
Philadelphia, PA 19106-1590
Jian W. Chen,
215-409-4217

Original Contract Amount:	$1,157,542.00
Change Orders to date:	$85,881.67
Percent Complete:	96%
Start Date:	June 2015
Schedule Completion Date:	March 2016
% Complete with our own forces:	15%

Prime

Reading Health System – Hail Damage – Window Replacements

Owner: Reading Health Systems
6th & Spruce Street
Reading, PA 19601
Dave Major
610-988-4351

Architect: N/A

Original Contract Amount:	$2,400,000.00
Change Orders to date:	$0
Percent Complete:	40%
Start Date	October 2015
Schedule Completion Date:	July 2016
% Complete with our own forces:	100%

Reading Health System – Flat Roofs

Owner: Reading Health Systems
6th & Spruce Street
Reading, PA 19601
David Major
610-988-4351

Architect: N/A

Contract Amount:	$6,312,662.00
Schedule Completion Date:	November 2015
% of work performed with own forces	5%

DocuSign Envelope ID: 8DBEB8AA-0E8A-4E60-958F-1F24043B8B5F

DocuSign Envelope ID: 8C8829B7-93A5-40A2-9DFD-ACDCBCE2BFC5

Reading Health System – N1 Cath Lab #1 – Renovation

Owner:	Reading Health Systems 6th & Spruce Street Reading, PA 19601 Jennifer Bossler 484-628-4353
Architect:	Ballinger 833 Chestnut Street, Suite 1400 Philadelphia, PA 19107 Karen Brooks 215-446-0900
Contract Amount:	$189,000.00
Schedule Completion Date:	October 2015
% of work performed with own forces	15%

Reading Health System – Spring Ridge Women's Health Center/Imaging Renovations

Owner:	Reading Health Systems 6th & Spruce Street Reading, PA 19601 Dave Major 610-988-4351
Architect:	EwingCole Federal Reserve Bank 100 North 6th Street Philadelphia, PA 19106-1590 Sinu George, 215-409-4269
Contract Amount:	$1,635,333.62
Schedule Completion Date:	April 2015
% of work perfomed with own forces:	15%

Reading Health System – D.O.B Suite 110 Renovation

Owner:	Reading Health Systems 6th & Spruce Street Reading, PA 19601 Dave Major 484-988-4351
Architect:	Noelker & Hull Associates, Inc. 2129 East High Street Pottstown, PA 19464 Don Wirt 610-326-4009
Contract Amount:	$333,121.00
Schedule Completion Date:	May 2015
% of work performed with own forces:	20%

Reading Health System – Hail Damage – Slate Roofing

Owner:	Reading Health Systems 6th & Spruce Street Reading, PA 19601 Dave Major 610-988-4351
Architect:	N/A
Contract Amount:	$3,608,223.00
Schedule Completion Date:	May 20, 2015
% of work performed with own forces:	10%

Reading Health System – 7th Avenue Building – N-1 Corridor Renovations

Owner:	Reading Health Systems 6th & Spruce Street Reading, PA 19601 Dave Major 610-988-4351
Architect:	Ballinger Architects 833 Chestnut Street, Suite 1400 Philadelphia, PA 19107 Karen Brooks 215-446-0900
Contract Amount:	$95,031.00
Date of Completion:	November 2014
% of work performed with own forces:	20%

DocuSign Envelope ID: 8DBEB8AA-0E8A-4E60-958F-1F24043B8B5F

DocuSign Envelope ID: 8C8829B7-93A5-40A2-9DFD-ACDCBCE2BFC5

Reading Health System – EPIC Training Center – 4th Floor Office Revisions

Owner: Reading Health Systems
6th & Spruce Street
Reading, PA 19601
Dave Major
610-988-4351

Architect: Kleckner Laucks Architects
18 Catherine Street
Shillington, PA 19607
David M. Kleckner/Peter J. Laucks
610-939-9660

Contract Amount: $314,580.00
Date of Completion: February 20, 2015
% of work performed with own forces: 5%

Bala Cynwyd Library—Additions & Alterations

Owner: Township of Lower Merion
75 East Lancaster Avenue
Ardmore, PA 19003
Don Cannon
610-645-6132

Architect: Vitetta Architects
2 International Plaza, Suite 340
Philadelphia PA 19113
Mark Johannesen
215-218-4733

Overall Project Size: $3,545,960.00
Original Contract Amount: $2,424,800.00
Change Order Amount: $119,498.00
Date of Completion: January 29, 2013
% of work performed with own forces: 7%

Jackson Elementary School—Additions & Alterations

Owner: School District of the City of York
31 North Pershing Avenue
York, PA 17404
Bradley Hanman
717-849-1333

Architect: EI Associates
2001 North Front Street, Building No. 3
Harrisburg, PA 17102
John Wert
717-233-4556

Overall Project Size: $6,573,720.00
Original Contract Amount: $4,533,600.00
Change Order Amount: $214,140.00
Date of Completion: April 2012
% of work performed with own forces: 5%

TRHMC M Building

Owner: The Reading Hospital & Medical Center
6th & Spruce Streets
Reading, PA 19601
Bryn Heist
610-988-4435

Architect STV
205 West Welsh Dr
Douglassville, PA 19518
William Leech
610-385-8420

Contract Amount: $6,267,758.71
Date of Completion: January 2014
% of work performed with own forces: 5%

TRHMC A-1 South NUC

Owner: The Reading Hospital & Medical Center
6th & Spruce Streets
Reading, PA 19601
Bryn Heist
610-988-4435

Architect STV
205 West Welsh Dr
Douglassville, PA 19518
William Leech
610-385-8420

Contract Amount: $458,084.15
Date of Completion: June 1, 2013
% of work performed with own forces: 5%

DocuSign Envelope ID: 8DBEB8AA-0E8A-4E60-958F-1F24043B8B5F

DocuSign Envelope ID: 8C8829B7-93A5-40A2-9DFD-ACDCBCE2BFC5

Barta Franklin Street Rehabilitation Project

Owner:	BARTA 1700 North 11th Street Reading, PA 19604 Robert Rimby	
Architect:	Design Works Architects 1240 Hill Road Reading, PA 19602 Bill Vitale 610-373-1725	
Contract Amount:		$3,204,786.62
Date of Completion:		January 31, 2013
% of work performed with own forces:		2%

TRHMC EPIC (VF) Training Center

Owner:	The Reading Hospital & Medical Center 6th & Spruce Streets Reading, PA 19601 Dave Major 484-988-4351	
Architect	Watkins Architect 29 West Main Street Fleetwood, PA 19522 610-944-5536	
Contract Amount:		$3,500,329.00
Date of Completion:		October 2012
% of work performed with own forces:		1%

TRHMC B4 South Trauma Administration Renovations

Owner:	The Reading Hospital & Medical Center 6th & Spruce Streets Reading, PA 19601 Bryn Heist 610-988-4435	
Architect	STV 205 West Welsh Dr Douglassville, PA 19518 William Leech 610-385-8420	
Contract Amount:		$940,767.81
Date of Completion:		July 2012
% of work performed with own forces:		5%

TRHMC C-Store Café Renovations

Owner:	The Reading Hospital & Medical Center 6th & Spruce Streets Reading, PA 19601 Jennifer Bossler 610-988-4353	
Architect:	King & King Architects 358 West Jefferson St Syracuse NY 13202 Kristie Mack	
Contract Amount:		$230,663.18
Date of Completion:		July 2012
% of work performed with own forces:		10%

Reading Heath Systems—1350 Broadcasting Road Fit Out

Owner:	Reading Health Systems 6th & Spruce Streets Reading, PA 19601 Mike Campian 484-628-445	
Architect:	Watkins Architect 29 West Main Street Fleetwood, PA 19522 610-944-5536	
Contract Amount:		$600,000.00
Date of Completion:		February 2014
% of work performed with own forces:		20%

DocuSign Envelope ID: 8DBEB8AA-0E8A-4E60-958F-1F24043B8B5F

DocuSign Envelope ID: 8C8829B7-93A5-40A2-9DFD-ACDCBCE2BFC5

3.6 On a separate sheet, list the construction experience and present commitments of the key individuals of your organization.

CONSTRUCTION EXPERIENCE OF KEY PERSONNEL:

Principal Officer
James P. Radwanski, CEO
Construction Experience: 40 years of experience on projects that range anywhere from $25,000.00 to $81,000,000.00. Largest project was $81,000,000.00 Reading Citadel Intermediate High School. Throughout the 38 years, have produced over $1 billion dollars" in public and private work.

Estimating
Michael Vottero
Construction Experience: 33 years of experience in commercial, educational and health care. Project values from $0 to $58M

Chief Operating Officer
David Major
Construction Experience: 34 ½ years of construction experience, Project values from $0 to $331M

Project Manager
Jared Noss
Construction Experience: 12 years industrial and 5 years in steel fabrication. Project Values from $0 to $58M

Marcus Carpenter
Construction Experience: 20 years construction experience, Project values from $0 to $50M

Superintendents (various Job sites)
Justin Abel, 20 years
Terry Keffer, 17 years
Jason Bossard, 18 years
John Young
Aaron Ure

Field Employees (approximately 10) various projects-

Expeditors/Administrative Assistant
Sarah Holland
Cheryl Engle
Francine Norris
Dave Engle, CFO

DocuSign Envelope ID: 8DBEB8AA-0E8A-4E60-958F-1F24043B8B5F

DocuSign Envelope ID: 8C8829B7-93A5-40A2-9DFD-ACDCBCE2BFC5

ACORD

PERRBUI-01

JRSTANSBERRY

CERTIFICATE OF LIABILITY INSURANCE

DATE (MM/DD/YYYY) 9/7/2021

THIS CERTIFICATE IS ISSUED AS A MATTER OF INFORMATION ONLY AND CONFERS NO RIGHTS UPON THE CERTIFICATE HOLDER. THIS CERTIFICATE DOES NOT AFFIRMATIVELY OR NEGATIVELY AMEND, EXTEND OR ALTER THE COVERAGE AFFORDED BY THE POLICIES BELOW. THIS CERTIFICATE OF INSURANCE DOES NOT CONSTITUTE A CONTRACT BETWEEN THE ISSUING INSURER(S), AUTHORIZED REPRESENTATIVE OR PRODUCER, AND THE CERTIFICATE HOLDER.

IMPORTANT: If the certificate holder is an ADDITIONAL INSURED, the policy(ies) must have ADDITIONAL INSURED provisions or be endorsed. If SUBROGATION IS WAIVED, subject to the terms and conditions of the policy, certain policies may require an endorsement. A statement on this certificate does not confer rights to the certificate holder in lieu of such endorsement(s).

PRODUCER
EHD (Engle-Hambright & Davies, Inc.)
One Meridian Blvd
Suite 4A01
Wyomissing, PA 19610

CONTACT NAME: Jennifer R. Stansberry
PHONE (A/C, No, Ext): (610) 374-4893 FAX (A/C, No): (610) 374-5612
E-MAIL ADDRESS: jrstansberry@ehd-ins.com

INSURER(S) AFFORDING COVERAGE	NAIC #
INSURER A : Cincinnati Casualty Company	28665
INSURER B : Selective Way Insurance Company	26301
INSURER C : Eastern Alliance Insurance Company	10724
INSURER D :	
INSURER E :	
INSURER F :	

INSURED
Perrotto Builders, Ltd
426 Warren Street
Reading, PA 19601

COVERAGES CERTIFICATE NUMBER: REVISION NUMBER:

THIS IS TO CERTIFY THAT THE POLICIES OF INSURANCE LISTED BELOW HAVE BEEN ISSUED TO THE INSURED NAMED ABOVE FOR THE POLICY PERIOD INDICATED. NOTWITHSTANDING ANY REQUIREMENT, TERM OR CONDITION OF ANY CONTRACT OR OTHER DOCUMENT WITH RESPECT TO WHICH THIS CERTIFICATE MAY BE ISSUED OR MAY PERTAIN, THE INSURANCE AFFORDED BY THE POLICIES DESCRIBED HEREIN IS SUBJECT TO ALL THE TERMS, EXCLUSIONS AND CONDITIONS OF SUCH POLICIES. LIMITS SHOWN MAY HAVE BEEN REDUCED BY PAID CLAIMS.

INSR LTR	TYPE OF INSURANCE	ADDL INSD	SUBR WVD	POLICY NUMBER	POLICY EFF (MM/DD/YYYY)	POLICY EXP (MM/DD/YYYY)	LIMITS	
A	X COMMERCIAL GENERAL LIABILITY			EPP 0391790	7/1/2021	7/1/2022	EACH OCCURRENCE	$ 1,000,000
	CLAIMS-MADE X OCCUR						DAMAGE TO RENTED PREMISES (Ea occurrence)	$ 500,000
							MED EXP (Any one person)	$ 10,000
							PERSONAL & ADV INJURY	$ 1,000,000
	GEN'L AGGREGATE LIMIT APPLIES PER:						GENERAL AGGREGATE	$ 2,000,000
	POLICY X PRO-JECT LOC						PRODUCTS - COMP/OP AGG	$ 2,000,000
	OTHER:							$
B	AUTOMOBILE LIABILITY			S 2357572	7/1/2021	7/1/2022	COMBINED SINGLE LIMIT (Ea accident)	$ 1,000,000
	ANY AUTO						BODILY INJURY (Per person)	$
	OWNED AUTOS ONLY / X SCHEDULED AUTOS						BODILY INJURY (Per accident)	$
	X HIRED AUTOS ONLY / X NON-OWNED AUTOS ONLY						PROPERTY DAMAGE (Per accident)	$
								$
A	X UMBRELLA LIAB / X OCCUR			EPP 0391790	7/1/2021	7/1/2022	EACH OCCURRENCE	$ 10,000,000
	EXCESS LIAB / CLAIMS-MADE						AGGREGATE	$ 10,000,000
	DED X RETENTION $ 0							$
C	WORKERS COMPENSATION AND EMPLOYERS' LIABILITY			0000044680	7/1/2021	7/1/2022	X PER STATUTE / OTH-ER	
	ANY PROPRIETOR/PARTNER/EXECUTIVE OFFICER/MEMBER EXCLUDED? (Mandatory in NH) Y/N N	N / A					E.L. EACH ACCIDENT	$ 1,000,000
	If yes, describe under DESCRIPTION OF OPERATIONS below						E.L. DISEASE - EA EMPLOYEE	$ 1,000,000
							E.L. DISEASE - POLICY LIMIT	$ 1,000,000

DESCRIPTION OF OPERATIONS / LOCATIONS / VEHICLES (ACORD 101, Additional Remarks Schedule, may be attached if more space is required)

CERTIFICATE HOLDER

Sample

CANCELLATION

SHOULD ANY OF THE ABOVE DESCRIBED POLICIES BE CANCELLED BEFORE THE EXPIRATION DATE THEREOF, NOTICE WILL BE DELIVERED IN ACCORDANCE WITH THE POLICY PROVISIONS.

AUTHORIZED REPRESENTATIVE

© 1988-2015 ACORD CORPORATION. All rights reserved.

The ACORD name and logo are registered marks of ACORD

DocuSign Envelope ID: 8DBEB8AA-0E8A-4E60-958F-1F24043B8B5F

DocuSign Envelope ID: 8C8829B7-93A5-40A2-9DFD-ACDCBCE2BFC5

EHD
One Meridian Blvd.
Suite 4A01
Wyomissing, PA 19610-3360

610-374-4893 or 800-438-2525
FAX: 610-374-5612
ehd-ins.com

September 7, 2021

RE: Perrotto Builders Ltd.
426 Warren Street
Reading, PA 19601

To whom it may concern:

Below are the Workers' Compensation experience mod rating factors for the above insured for the current and prior three years. Should you have any questions, please let me know.

2020: 1.022

2019: 0.856

2018: 0.942

2017: 0.950

Sincerely,

Jennifer Stansberry
Commercial Account Manager

DocuSign Envelope ID: 8DBEB8AA-0E8A-4E60-958F-1F24043B8B5F

DocuSign Envelope ID: 8C8829B7-93A5-40A2-9DFD-ACDCBCE2BFC5

OSHA's Form 300A

Summary of Work-Related Injuries and Illnesse

Year: 2018

Form approved OMB no. 1218-0176

All establishments covered by part 1904 must complete this Summary page, even if no work-related injuries or illnesses occurred during the year. Remember to review the Log to verify that the entries are complete and accurate before completing this summary. Using the Log, count the individual entries you made for each category. Then write the totals below, making sure you've added the entries from every page of the Log. If you had no cases, write "0". Employees, former employees, and thier representatives have the right to review the OSHA Form 300 in its entirety. They also have limited access to the OSHA Form 301 or its equivalent. See 29 CFR Part 1904.35 for further details on the access provisions for these forms.

Number of Cases

Total number of deaths	Total number of cases with days away from work	Total number of cases with job transfer or restriction	Total number of other recordable cases
0	0	0	0
(G)	(H)	(I)	(J)

Number of Days

Total number of days of job transfer or restriction	Total number of days away from work
0	0
(K)	(L)

Injury and Illness Types

Total number of...
(M)

(1) Injuries	0	(4) Poisonings	0
(2) Skin Disorders	0	(5) All other illnesses	0
(3) Respiratory conditions	0		

Post this Summary page from February 1 to April 30 of the year following the year covered by the form.

Public reporting burden for this collection of information is estimated to average 50 minutes per response, including time to review the instructions, search and gather the data needed, and complete and review the collection of information. Persons are not required to respond to the collection of information unless it displays a currently valid OMB control number. If you have any comments about these estimates or any other aspects of this data collection, contact: US Department of Labor, OSHA Office of Statistics, Room N-3644, 200 Constitution Avenue, NW, Washington, DC 20210. Do not send the completed forms to this office.

Facility Information:

Establishment name: Perrotto Builders Ltd

Street 426 Warren Street

City Reading State PA ZIP 19601

Industry description: General Contractor

Standard Industrial Classification (SIC) if known: 1542

Employment Information

(If you don't have these figures, see the Worksheet on the back of OSHA Form 300A to estimate)

Annual average number of employees: 25

Total hours worked by all employees last year: 85,840

Sign here

Knowingly falsifying this document may result in a fine.
I certify that I have examined this document and that to the best of my knowledge the entries are true, accurate, and complete.

Francine Norris, Administrative Assistant

Company executive | Title

610-374-9421

Phone | Date

DocuSign Envelope ID: 8DBEB8AA-0E8A-4E60-958F-1F24043B8B5F

DocuSign Envelope ID: 8C8829B7-93A5-40A2-9DFD-ACDCBCE2BFC5

OSHA's Form 300A

Summary of Work-Related Injuries and Illnesse

Year: 2019

Form approved OMB no. 1218-0176

All establishments covered by part 1904 must complete this Summary page, even if no work-related injuries or illnesses occurred during the year. Remember to review the Log to verify that the entries are complete and accurate before completing this summary. Using the Log, count the individual entries you made for each category. Then write the totals below, making sure you've added the entries from every page of the Log. If you had no cases, write "0". Employees, former employees, and thier representatives have the right to review the OSHA Form 300 in its entirety. They also have limited access to the OSHA Form 301 or its equivalent. See 29 CFR Part 1904.35 for further details on the access provisions for these forms.

Number of Cases

Total number of deaths	Total number of cases with days away from work	Total number of cases with job transfer or restriction	Total number of other recordable cases
0	0	0	0
(G)	(H)	(I)	(J)

Number of Days

Total number of days of job transfer or restriction	Total number of days away from work
0	0
(K)	(L)

Injury and Illness Types

Total number of...
(M)

(1) Injuries	0	(4) Poisonings	0
(2) Skin Disorders	0	(5) All other illnesses	0
(3) Respiratory conditions	0		

Post this Summary page from February 1 to April 30 of the year following the year covered by the form.

Public reporting burden for this collection of information is estimated to average 50 minutes per response, including time to review the instructions, search and gather the data needed, and complete and review the collection of information. Persons are not required to respond to the collection of information unless it displays a currently valid OMB control number. If you have any comments about these estimates or any other aspects of this data collection, contact: US Department of Labor, OSHA Office of Statistics, Room N-3644, 200 Constitution Avenue, NW, Washington, DC 20210. Do not send the completed forms to this office.

Facility Information:

Establishment name: Perrotto Builders Ltd

Street 426 Warren Street

City Reading State PA ZIP 19601

Industry description: General Contractor

Standard Industrial Classification (SIC) if known 1542

Employment Information

(If you don't have these figures, see the Worksheet on the back of OSHA Form 300A to estimate)

Annual average number of employees 25

Total hours worked by all employees last year 56,808

Sign here

Knowingly falsifying this document may result in a fine.
I certify that I have examined this document and that to the best of my knowledge the entries are true, accurate, and complete.

Francine Norris, Administrative Assistant

Company executive Title

810-374-9421

Phone Date

OSHA's Form 300A

Summary of Work-Related Injuries and Illnesse

Year: 2020

Form approved OMB no. 1218-0176

All establishments covered by part 1904 must complete this Summary page, even if no work-related injuries or illnesses occurred during the year. Remember to review the Log to verify that the entries are complete and accurate before completing this summary. Using the Log, count the individual entries you made for each category. Then write the totals below, making sure you've added the entries from every page of the Log. If you had no cases, write "0". Employees, former employees, and thier representatives have the right to review the OSHA Form 300 in its entirety. They also have limited access to the OSHA Form 301 or its equivalent. See 29 CFR Part 1904.35 for further details on the access provisions for these forms.

Number of Cases

Total number of deaths	Total number of cases with days away from work	Total number of cases with job transfer or restriction	Total number of other recordable cases
0	0	0	0
(G)	(H)	(I)	(J)

Number of Days

Total number of days of job transfer or restriction	Total number of days away from work
0	0
(K)	(L)

Injury and Illness Types

Total number of...
(M)

(1) Injuries	0	(4) Poisonings	0
(2) Skin Disorders	0	(5) All other illnesses	0
(3) Respiratory conditions	0		

Post this Summary page from February 1 to April 30 of the year following the year covered by the form.

Public reporting burden for this collection of information is estimated to average 50 minutes per response, including time to review the instructions, search and gather the data needed, and complete and review the collection of information. Persons are not required to respond to the collection of information unless it displays a currently valid OMB control number. If you have any comments about these estimates or any other aspects of this data collection, contact: US Department of Labor, OSHA Office of Statistics, Room N-3644, 200 Constitution Avenue, NW, Washington, DC 20210. Do not send the completed forms to this office.

Facility Information:

Establishment name: Perrotto Builders Ltd

Street 425 Warren Street

City Reading State PA ZIP 19601

Industry description: General Contractor

Standard Industrial Classification (SIC) if known 1542

Employment Information

(If you don't have these figures, see the Worksheet on the back of OSHA Form 300A to estimate)

Annual average number of employees 25

Total hours worked by all employees last year 51,619

Sign here

Knowingly falsifying this document may result in a fine.
I certify that I have examined this document and that to the best of my knowledge the entries are true, accurate, and complete.

Francine Norris, Administrative Assistant
Company executive Title

610-374-9421
Phone Date

DocuSign Envelope ID: 8DBEB8AA-0E8A-4E60-958F-1F24043B8B5F
DocuSign Envelope ID: 8C8829B7-93A5-40A2-9DFD-ACDCBCE28FC5

DocuSign Envelope ID: 8DBEB8AA-0E8A-4E60-958F-1F24043B8B5F

HOWARD
CONCRETE PUMPING COMPANY INC.

Shane Tilves

HOWARD CONCRETE PUMPING Co., Inc
ASSISTANT PROJECT MANAGER – FOUNDATION DIVISION

Mr. Tilves possesses over 5 years of experience in the geotechnical and construction fields. Specific expertise includes general construction of various bridge structures, design-build solutions for earth retention, slope stabilization, using a variety of techniques such as driven piling, drilled shaft/caisson & auger cast-in-place deep foundations.

Mr. Tilves's background includes executing and overseeing work throughout Pennsylvania. As the Assistant Project Manager of Howard's Foundation Division, Mr. Tilves is responsible for development and execution of approved project work plans, field operations, personnel and field resource allocation, design/analysis, contract negotiations, subcontract management and divisional profit and loss responsibility.

RELEVANT GEOTECHNICAL EXPERIENCE

Foundation (Drilled Shafts / Caissons)

SR 64 Fishing Creek – Centre County, PA - ACS
Assistant Project Manager - Predrilling of 7 – 30" diameter rock socketed shafts for GC designed temporary shoring wall.

Harleysville Interchange – Montgomery County, PA - ACS
Project Manager - Predrilling of 102 each shafts ranging from 10 to 30 feet in length for Allan Myer's shoring and retaining walls.

Lansdale Interchange – Montgomery County, PA - ACS
Project Manager - Predrilling for Allan Myer's retaining walls.

PAWC Shenango – Lawrence County, PA - ACS
Project Manager - Installation of 12 each 32.5ft caisson foundations utilizing 30-inch diameter tooling. Furnish and install rebar cages and concrete.

PTC Southern Beltway 55B – Washington County, PA - ACS
Assistant Project Manager - Installation of 48 each caisson foundations for new bridge construction. Diameters were 60-inch soil sections over 54-inch rock sockets ranging in drill depths from 30 feet to 70 feet. Furnish and install concrete via tremie system.

MD-40 Over Gunpowder Falls – Baltimore, MD - ACS
Project Manager - Installation of 116 each caisson foundations for new bridge construction. Diameters were 30-inch soil sections over 24-inch rock sockets ranging in drill depths from 30 feet to 50 feet. Drilling operations in a shoring cell below sea level, telescoping casing with running sands.

Liberty Tunnel Phase 5 – Allegheny County, PA - ACS
Project Manager - Predrilling of 22 each shafts for GC's new Fan House retaining wall.

United Hospital – East Addition – Harrison County, WV - HCP
Estimator and Project Manager - Installation of two (2) each rock-socketed caisson for the new hospital addition. Design-build 18-ft high cantilever shoring wall for temporary excavation support utilizing seven (7) each drilled soldier beams and mixed-hardwood lagging.

Micropiles

United Hospital – East Addition – Harrison County, WV - HCP
Estimator and Project Manager - Installation of 38 each 30-ft rock anchors for building foundations. Perform verification and proof tension tests to verify design.

DocuSign Envelope ID: 8DBEB8AA-0E8A-4E60-958F-1F24043B8B5F

HOWARD
CONCRETE PUMPING COMPANY INC.

Morton Road Retaining Wall – Pittsburgh, PA - HCP
Assistant Project Manager - Installation of 25 each 5.5-inch micropile for a new retaining wall foundation. The project included tension verification testing of the micropiles.

ATI Furnace Foundations- Latrobe, PA - HCP
Assistant Project Manager - Installation of 30 each 5.5-inch micropile for new construction. The project included tension verification testing of the micropiles.

SR 403 Moxham Stonycreek – Johnstown, PA - ACS
Assistant Project Manager - Installation of 26 each 9 5/8" micropile for new bridge abutments.

Greenfield Bridge – Allegheny County, PA - ACS
Assistant Project Manager - Installation of 166 each 9 5/8" micropile for bridge abutment and pier foundations.

SR 7404-07M – Northampton County, PA - ACS
Assistant Project Manager - Pier 7 Micropile Foundations and associated load testing. Design/build temporary excavation support system utilizing drilled in micropiles and tiebacks.

Newton Street – City of Pittsburgh, PA - ACS
Assistant Project Manager - Installation of drilled micropile and precast lagging wall. Consisted of 35 drilled micropile shafts and 9 drilled lagging support shafts.

Pile Driving

Independent Spent Fuel Storage Project – Delta, PA - ACS
Assistant Project Manager - Installation three permanent sheet pile walls totaling in 1,102-wall feet utilizing an ABI vibratory rig.

Moraine State Park WWTP Improvement - Butler, PA - ACS
Assistant Project Manager - Installation of 138 each H-Pile for a new Headworks Building foundations utilizing a crane, leads, and diesel hammer.

Earth Retention Systems (Drilled/Driven)

United Hospital – East Addition – Harrison County WV - HCP
Estimator and Assistant Project Manager - Design-build 18-ft high cantilever shoring wall for temporary excavation support utilizing seven (7) each drilled soldier beams and mixed-hardwood lagging.

ECMS 27543 SR 7463 Kenmawr Bridge – Pittsburgh, PA - ACS
Assistant Project Manager - Installation of five (5) each temporary anchors for Golden Triangle's shoring wall.

Independent Spent Fuel Storage Project – Delta, PA - ACS
Assistant Project Manager - Installation of three permanent soil nail walls totaling in 27,850-square feet of wall and 1,105 soil nails utilizing permanent double corrosion protected anchors, welded-wire mesh, and twelve-inch-thick shotcrete.

Penn State Henning Building Replacement – Centre County, PA - ACS
Estimator and Project Manager - Design/build 670 wall feet temporary excavation support system with a max exposed height of 25 feet utilizing drilled in micropile soldier beams, steel channel waler, tiebacks, and mixed hardwood lagging. Karst country with large grout takes, finished ahead of schedule.

DocuSign Envelope ID: 8DBEB8AA-0E8A-4E60-958F-1F24043B8B5F

HOWARD
CONCRETE PUMPING COMPANY INC.

Miller Street Apartments – Pittsburgh, PA - ACS
Assistant Project Manager - Design/build 220 wall feet temporary excavation support system with max exposed height of 30 feet utilizing soil nails, chain link, steel wire mesh, shotcrete and bearing plates. Soil nail shoring system was to facilitate excavation for new apartment building construction while underpinning existing residences above the working area.

CSVT River Bridge – Northampton County, PA - ACS
Estimator and Project Manager - Design/build 200 wall feet temporary excavation support system with a max exposed height of 27 feet utilizing drilled in soldier beams, steel channel waler, tiebacks, and mixed hardwood lagging. Design, furnish, and install tiebacks for Trumbull's cofferdam.

Empire Apartments – Pittsburgh, PA - ACS
Assistant Project Manager - Design/build 700 wall feet temporary excavation support system with max exposed heights of 30 feet utilizing drilled in soldier beams, hollow bar "sidewinder" tiebacks, and mixed hardwood lagging.

Lewis Run EQ Basin – Allegheny County, PA - ACS
Assistant Project Manager - Design/build temporary excavation support system utilizing a drilled in soldier beam, tieback, and mixed hardwood lagging system above a soil nail and shotcrete shoring system. Soil nail and shotcrete shoring was required here due to the expansive pyritic/carbonaceous rock. Tank tiedown anchors were installed as well.

SR 1002 Marsh Creek – Centre County, PA - ACS
Project Manager - Design/build temporary excavation support systems for abutment demo and replacement utilizing drilled in soldier beams, tiebacks, waler, and mixed hardwood lagging.

SR 15 Over Trout Run – Lycoming County, PA - ACS
Project Manager - Design/build centerline temporary excavation support system utilizing drilled in soldier beams and mixed hardwood lagging.

Ligonier Valley YMCA – Westmoreland County, PA - ACS
Assistant Project Manager - Design/build permanent retaining wall/excavation support system utilizing drilled in soldier beams, mixed hardwood lagging, and precast panels.

Bloomsburg University – Bloomsburg, PA - ACS
Assistant Project Manager - Design/build of two cantilever temporary excavation support system utilizing drilled in soldier beam and lagging.

Lehigh Cement Soil Nail Walls – Union Bridge, MD - ACS
Project Manager - Design/build of two temporary excavation support system utilizing soil nails and chain link.

Wildwood Slide – Allegheny County, PA - ACS
Assistant Project Manager - Installation of two slope stabilization systems utilizing 115 soil nails and 340 SF TECCO mesh.

CMU Tepper Soil Nail Walls – Pittsburgh, PA - ACS
Assistant Project Manager - Design/build temporary excavation support system utilizing soil nails and shotcrete. Three soil nail systems of 650 wall feet and 40 vertical feet including soil nails, grout, wire mesh, rebar reinforcing, shotcrete, and bearing plates.

RELEVANT HEAVY HIGHWAY EXPERIENCE

ECMS #3797 Montour Run – Clinton County, PA - ACS
Project Manager - Removal of two existing structures and construction of their replacements, Precast Concrete Box Culvert and a Precast Concrete Arch Culvert; both using temporary roadways with temporary traffic signals. Construction includes Superpave Asphalt Mixture Designs for the base, binder, and wearing courses, guide rail, pavement markings, and miscellaneous construction.

DocuSign Envelope ID: 8DBEB8AA-0E8A-4E60-958F-1F24043B8B5F

HOWARD
CONCRETE PUMPING COMPANY INC.

ECMS #107788 Lititz Road – Lancaster County, PA - ACS
Project Manager - Project consisted of the replacement of two single-span bridges with precast box culverts, a bridge removal, and other miscellaneous construction.

Current Assignments

Port Authority McKeesport Park and Ride – Pittsburgh, PA – HCP
Estimator and Assistant Project Manager – Drill and install 18 each 36-inch diameter caisson foundations for canopy structures. Project to begin April 2021 and should last two (2) weeks.

ECMS 76393 Dooker's Hollow – Pittsburgh, PA – HCP
Assistant Project Manager – Drill and install four (4) each 72-inch over 66-inch diameter caissons for bridge pier foundations. Predrill and drive 98 each piling foundations for abutment and pier foundations. Project will finish at the end of April.

Power Contracting I-79 DMS – Bridgeville, PA - HCP
Project Manager – Drill and mine grout five (5) each 6-inch diameter shafts to mine elevation. The mine will then be pumped full of low strength grout. Project to begin in April and should last one week.

ECMS 104228 Almono TIFF – Pittsburgh, PA - HCP
Assistant Project Manager – Drill and install 11 each 11-7/8-inch diameter micropile foundations for bridge foundations. Project includes two verification tension tests. Project to begin June 2021 and should take one months' time to complete.

Employment History

2020 to Present: Assistant Project Manager, Howard Concrete Pumping Co., Inc., Houston, PA - HCP
Responsibilities included all project management functions for the foundation division including scheduling, budgeting, costs review/control, equipment/material allocation and operations supervision; marketing/business development functions; and developing project proposals and estimates.

2016 to 2020: Project Engineer, Amelie Construction & Supply, Pittsburgh, PA - ACS
Responsibilities included all project management functions for the general construction and foundation division including scheduling, budgeting, costs review/control, equipment/material allocation and operations supervision; marketing/business development functions; and developing project proposals and estimates.

2015 to 2016: Construction Inspector and Technician, Jeff Zell Consultants, Coraopolis, PA
Responsibilities included field inspection and material testing on private and public projects. Field testing included concrete and soil compaction testing. Samples were then submitted to the lab for further analysis. Daily field and data logs were kept for submission to the Owners representative.

EDUCATION

B.S., Earth and Energy Resources – University of Pittsburgh at Johnstown, 2015

DocuSign Envelope ID: 8DBEB8AA-0E8A-4E60-958F-1F24043B8B5F

IMT

A 150

hydraulic drill rig

IMT

DocuSign Envelope ID: 8DBEB8AA-0E8A-4E60-958F-1F24043B8B5F

1974

IMT is founded by Mr. Giulio Accorroni.

1975
The first innovative hydraulic drill rig (model 75 type G) is patented. Capable of drilling up to a depth of 30 meters (best market performance at the time)

1978
The Accorroni family buys 100% of IMT shares and Giulio Accorroni is appointed IMT's sole Director.

1984
Andrea Accorroni takes over IMT management following the death of his older brother, (Fabio Accorroni , Giulio's first son)

1985
The company introduces the 805 model, which soon becomes very successful and used for big construction projects, such as the Sagrada Familia in Barcelona, Spain.

1992
New innovative models are launched (i.e., sound-proof machine and model AF12, assembled on a crawler base completely produced by IMT).

1993
Beginning of co-operation with Caterpillar (CAT): IMT starts assembling drill rigs on CAT bases (IMT is the first drill rig manufacturer to do this; other manufacturers will soon follow the example); IMT starts a distribution agreement in North America and Canada for its drill rigs mounted on CAT bases through the CAT dealer in Miami, Kelly Tractor Company In the same period, the technology for driven piles used in the U.S. until then starts moving towards the European piling system and the drilling equipment demand in the US market for all European manufacturers starts growing.

1997
IMT produces the AF50, the biggest drill rig in the world at the time, and sells no. 7 units to the Japanese multi-national company Sumitomo. Giulio and Andrea Accorroni are invited to Osaka for a lecture on the technical characteristics of the rig. The lecture is attended by the owners/directors of the biggest Japanese construction companies.

2005
IMT patents an innovative drilling system related to highly seismic grounds, the "Multi Rotary driven Soil Mixing Pile".

2006-2008
IMT increases its production range and doubles its sales. Andrea Accorroni, current President of IMT INTERNATIONAL S.p.A

2009-2010
IMT reacts to the global economic crisis by launching 2 new product lines in the market with traditional technology (the "AG" series, assembled on HITACHI base, and the "A" series, mounted on IMT base), and completes the first prototype of drill rig for seismic grounds, the AF460 model, which uses the patented "Multi Rotary driven Soil Mixing Pile" system. The prototype is presented at BAUMA 2010, the most important international exhibition for construction machinery. The complete production range is developed thereafter.

2011
IMT AGM appoints a new Board of Directors.

2011/2013
IMT develops the prototypes for the full range of the AF series drilling rigs with Tier 4 engines, as well as the newly-born A125 and A150 models, mounted on IMT base and powered by CAT.

2014/2015
IMT upgrades the A-series machines with new engines and design, and develops its own particular water well technology system.

2016/2019
The brand new range of A-series rigs with Tier 3 and Tier 4 engines, completely designed and developed by IMT, and lauched into the market.

Andrea Accorroni

DocuSign Envelope ID: 8DBEB8AA-0E8A-4E60-958F-1F24043B8B5F

A 150

IMT, a global leader in the manufacture of drill rigs and a brand which has always been synonymous with quality and reliability in the pursuit of satisfying market demand, is pleased to present a new series of A drill rigs. This new line is unique in its simplicity and flexibility of use, while also perfectly maintaining sturdiness and productivity.

The machine was designed for very arduous applications as, thanks to its high torque and high-performing winch, it is capable of reaching great depths, also with great diameters. Its heavy-duty undercarriage guarantees optimal stability in various working conditions.

DocuSign Envelope ID: 8DBEB8AA-0E8A-4E60-958F-1F24043B8B5F

A 150 - Hydraulic Drill Rig

Crowd cylinder version

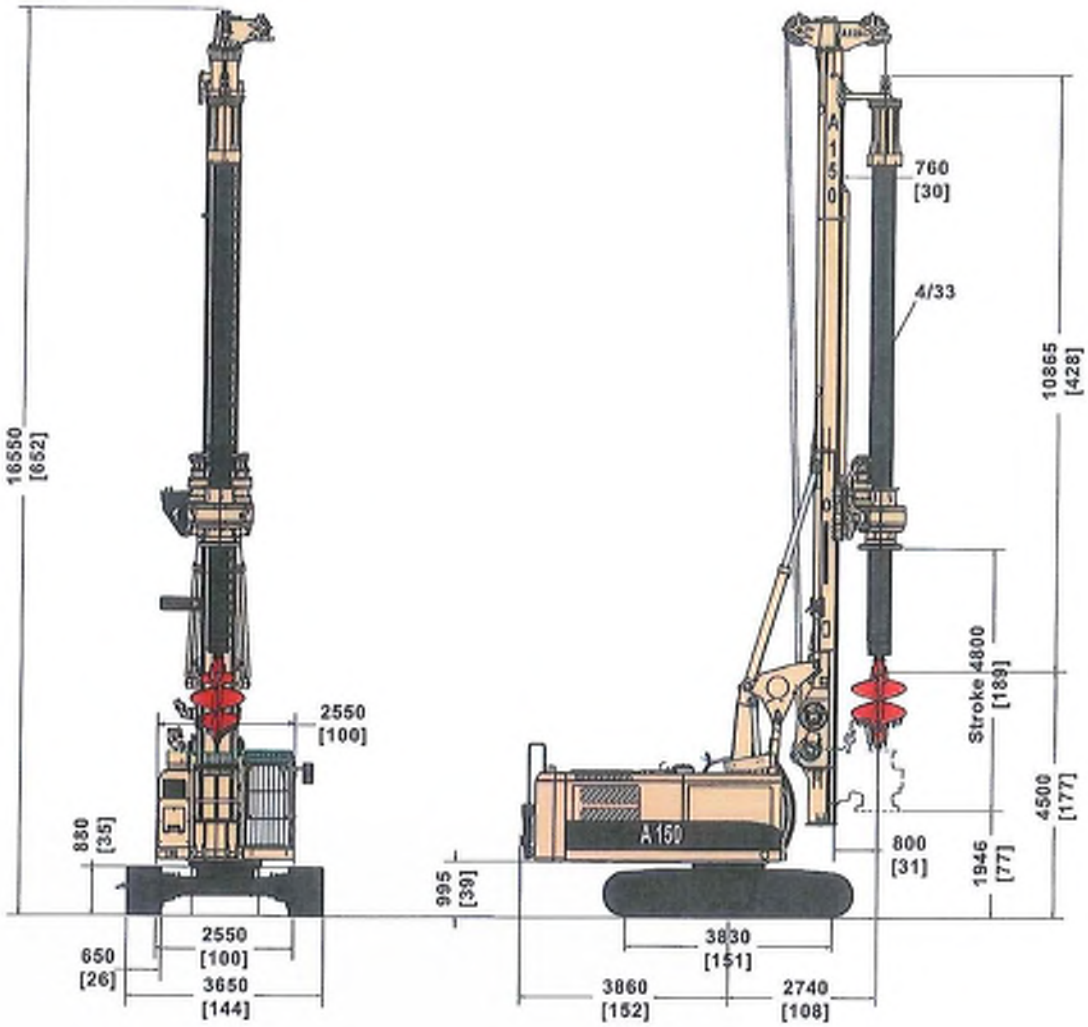

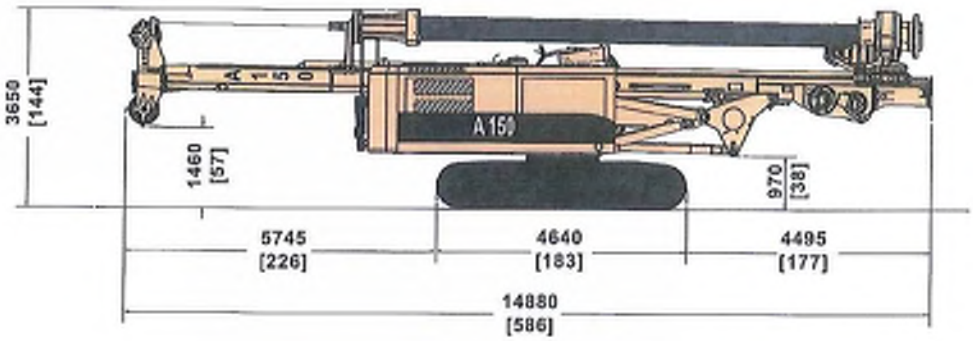

DocuSign Envelope ID: 8DBEB8AA-0E8A-4E60-958F-1F24043B8B5F

Technical specifications

A150 Tier 4 Final

Rotary		
Nominal torque	kNm	160
	lbf ft	118010
Min. Working speed	rpm	8
Max. Working speed	rpm	28
Min. Discharge speed	rpm	40
Max. Discharge speed	rpm	110

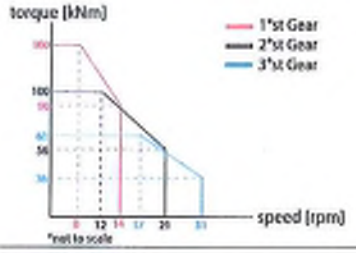

Winches		
Main winch pull force	kN	155
	lbf	34850
Main winch speed	m/min	80
	ft/min	262
Main winch cable diameter	mm	24
	in	/
Auxiliary winch pull force	kN	75
	lbf	16865
Auxiliary winch speed	m/min	75
	ft/min	246
Auxiliary winch cable diameter	mm	18
	in	/
Crowd System		
Kelly crowd push	kN	160
	lbf	35970
Kelly crowd pull	kN	200
	lbf	44965
Stroke (mm)	mm	4800
	in	189
Base		**IMT**
Undercarriage length / widening range / shoe	mm	CAT 4640 / 2550 - 3650 / 650
	in	182 / 100 - 144 / 25,6
Engine type		CAT C7.1 Tier 4F
		169 KW (227 HP) @1900 rpm
Mast		
Mast raking forward	degree	5°
Mast side raking	degree	±5°
Mast raking backwards	degree	15°
Pile max diameter	mm	1600
	in	63
Kelly bar		
Standard		4/33
Options available		4/25 - 5/42
Operating Weight w/standard kelly bar	t (metric)	46,75
	lbs	103070
Operating Weight w/o standard kelly bar	t (metric)	40,5
	lbs	89290

DocuSign Envelope ID: 8DBEB8AA-0E8A-4E60-958F-1F24043B8B5F

A 150 - Hydraulic Drill Rig

Working area crowd cylinder

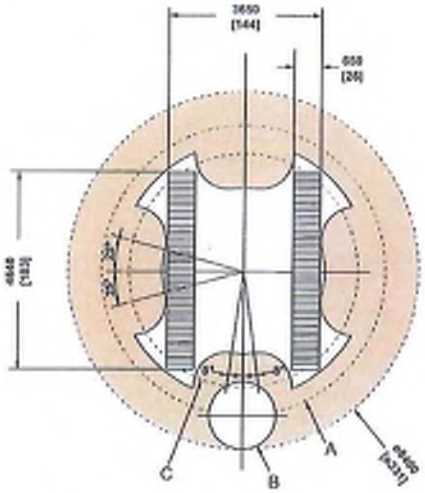

A MAX WORKING RADIUS 3400 [R 134]

B MAX TOOL DIAMETER 1600 [ø 63]

C MIN WORKING RADIUS 2740 [R 108]

Removable parts for transport phase

Rotary Weight = 4,2 ton (9260 lb)

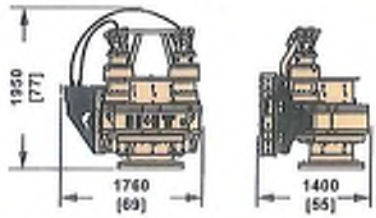

Counterweight Weight = 6,4 ton (14110 lb)

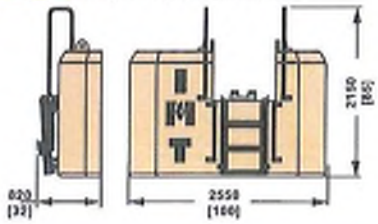

Equipment

- STANDARD EQUIPMENT -

Air conditioner

Neutral lever (lock out) for all control

Guard cab front

Guard cat top

Top cabin working lights

Main and auxiliary load sensing circuit

Free flow during drilling phase

Automatic bottom hole stop

Depth measuring device on main winch

Mast inclination mesurement

Kelly bar intelocking 4/33 (33m depth)

Automatic engine control to safe fuel

Electrical refuelling pump

- OPTIONAL EQUIPMENT-

Biodegradable oil

Lateral / Rear camera

Cardanic universal joint kit

LCA kit

Every kind of Kelly bar

DocuSign Envelope ID: 8DBEB8AA-0E8A-4E60-958F-1F24043B8B5F

A 150 - Hydraulic Drill Rig

Kelly bar standard version

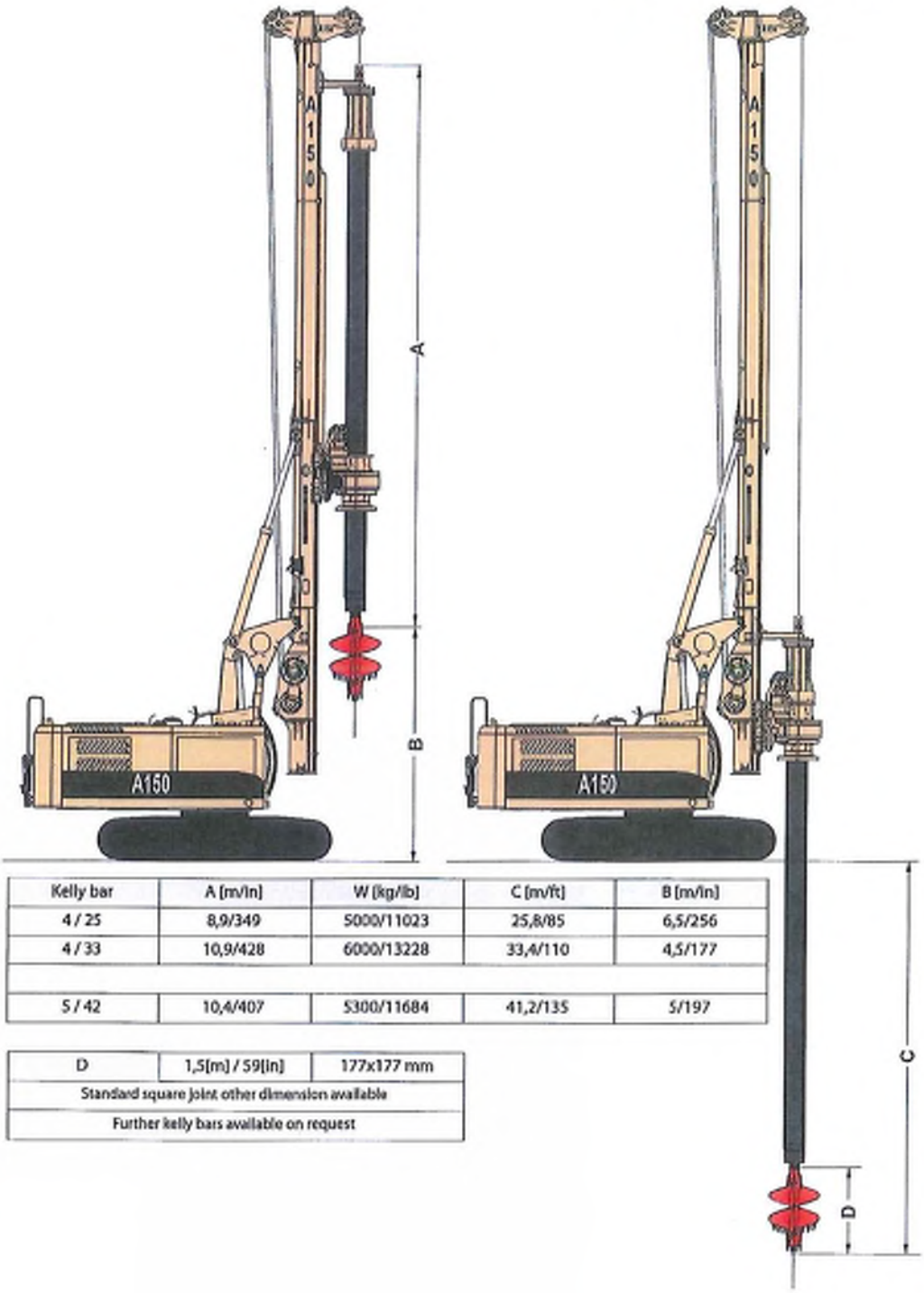

	Kelly bar	A [m/in]	W [kg/lb]	C [m/ft]	B [m/in]
4 PARTS	4 / 25	8,9/349	5000/11023	25,8/85	6,5/256
	4 / 33	10,9/428	6000/13228	33,4/110	4,5/177
5 PARTS	5 / 42	10,4/407	5300/11684	41,2/135	5/197

D	1,5[m] / 59[in]	177x177 mm
Standard square joint other dimension available		
Further kelly bars available on request		

DocuSign Envelope ID: 8DBEB8AA-0E8A-4E60-958F-1F24043B8B5F

A 150 - Hydraulic Drill Rig

LCA version

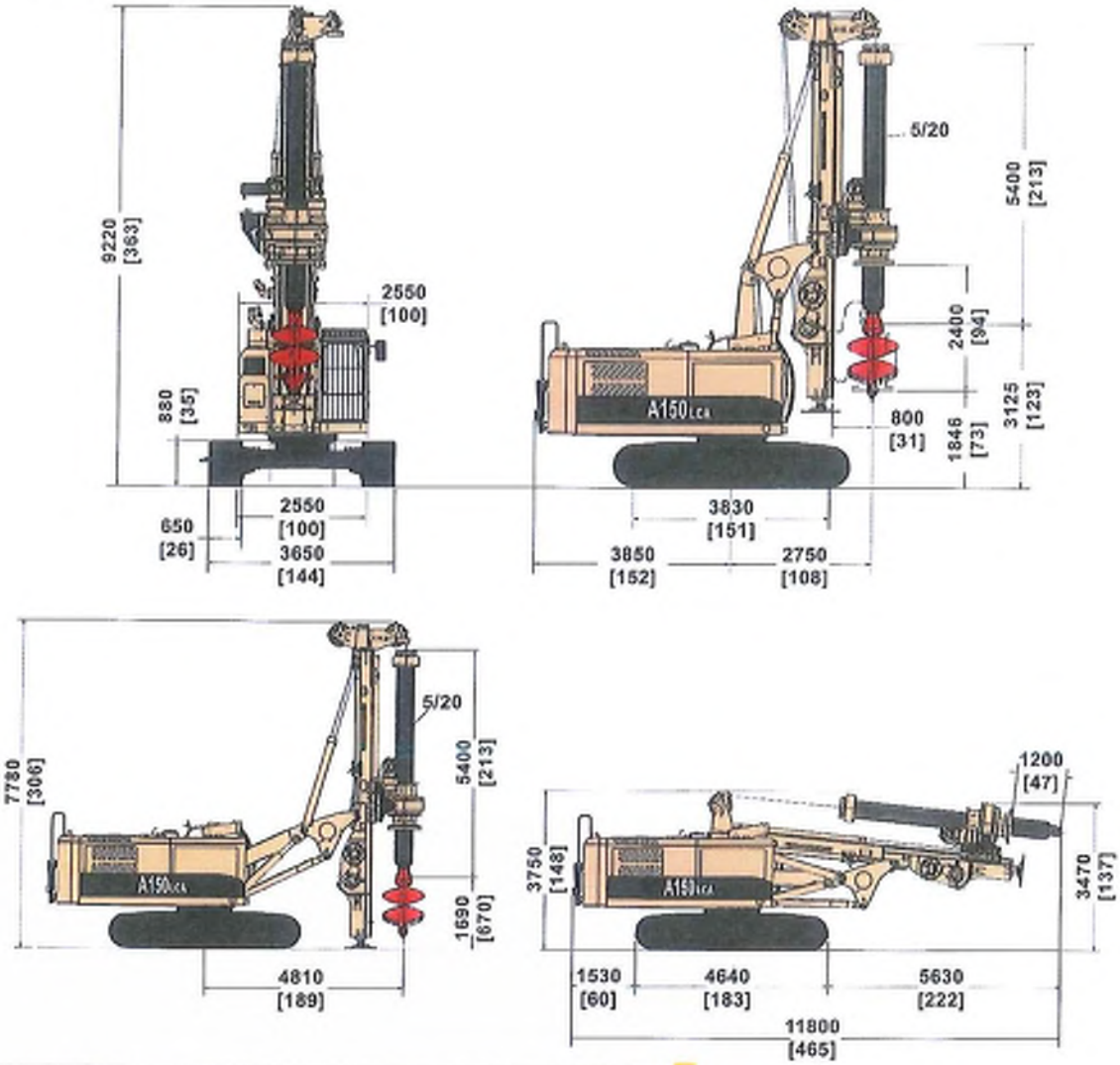

Technical specifications

A150 Lca Tier 4 Final		
Crowd System		
Stroke (mm)	mm	2400
	in	94
Kelly bar		
Standard		5/20
Options available		
Operating Weight w/standard kelly bar	t (metric)	43,05
	lbs	94910
Operating Weight w/o standard kelly bar	t (metric)	39,8
	lbs	87750

DocuSign Envelope ID: 8DBEB8AA-0E8A-4E60-958F-1F24043B8B5F

Working area LCA

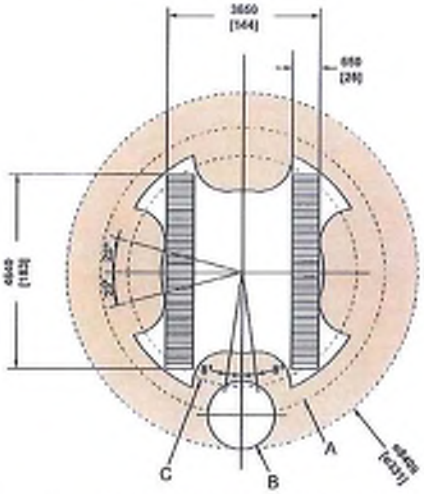

A MAX WORKING RADIUS 3400 [R 134]

B MAX TOOL DIAMETER 1600 [ø 63]

C MIN WORKING RADIUS 2740 [R 108]

Removable parts for transport phase

Rotary Weight = 4,2 ton [9260 lb]

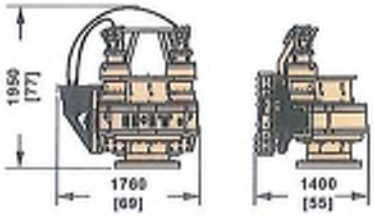

Counterweight Weight = 6,4 ton [14110 lb]

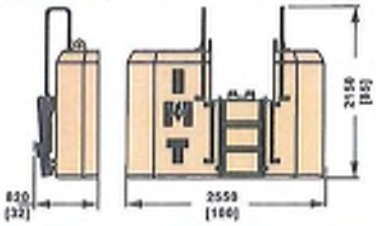

Kelly bar LCA version

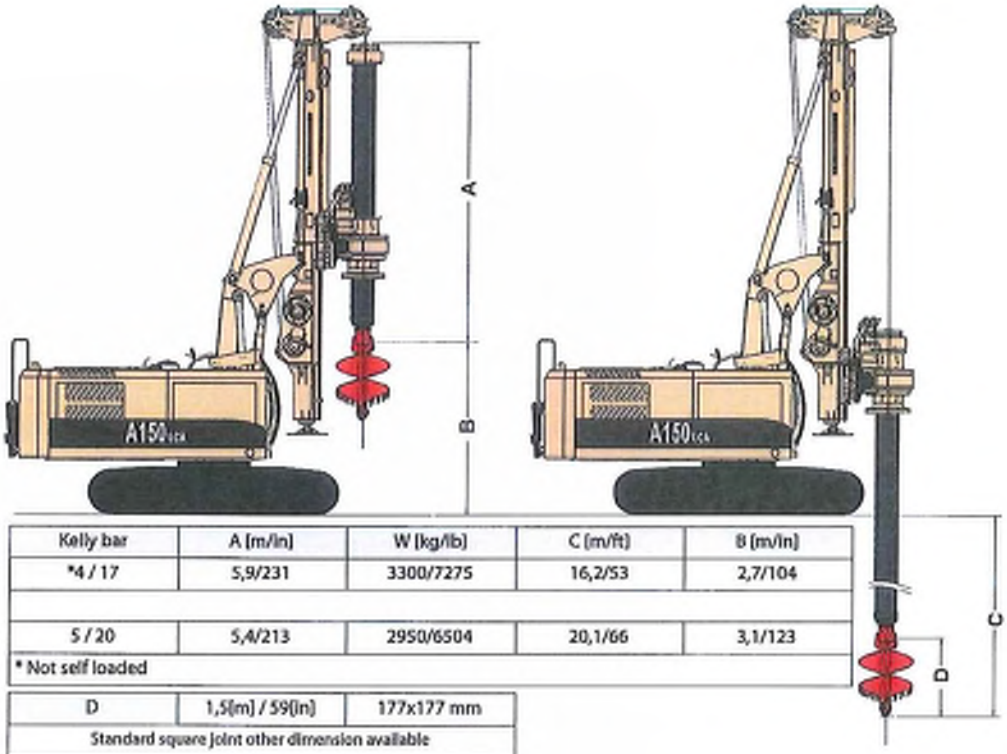

	Kelly bar	A [m/in]	W [kg/lb]	C [m/ft]	B [m/in]
4 PARTS	*4 / 17	5,9/231	3300/7275	16,2/53	2,7/104
5 PARTS	5 / 20	5,4/213	2950/6504	20,1/66	3,1/123
	* Not self loaded				

D	1,5[m] / 59[in]	177x177 mm
Standard square joint other dimension available		
Further kelly bars available on request		

DocuSign Envelope ID: 8DBEB8AA-0E8A-4E60-958F-1F24043B8B5F

Worldwide sales and assistance network

Canada and U.S.A. (North America)

Mexico

United Kingdom

Sw

Spain

Portugal

Malta / Libya

Egyp

Nigeria

IMT dealers, a global network at your service
IMT, like very few other companies in the field, has a global commercial and assistance network wich is present in over 30 countries.
From any part of the world IMT clients know which they can always count on fast and efficient service.

DocuSign Envelope ID: 8DBEB8AA-0E8A-4E60-958F-1F24043B8B5F

Russia

Sweden - Denmark

Turkey

Israel

Iran

ypt

GCC Countries

India-Pakistan-Sri Lanka

ria

Singapore

Australia

New Zeland

This document is created and distributed by IMT. This document may not be reproduced, modified or exhibited without authorization by IMT srl. All rights reserved. ©

All technical data are indicative and subject to change without notice.

DocuSign Envelope ID: 8DBEB8AA-0E8A-4E60-958F-1F24043B8B5F

Note

DocuSign Envelope ID: 8DBEB8AA-0E8A-4E60-958F-1F24043B8B5F

Note

DocuSign Envelope ID: 8DBEB8AA-0E8A-4E60-958F-1F24043B8B5F

Note

DocuSign Envelope ID: 8DBEB8AA-0E8A-4E60-958F-1F24043B8B5F

Note

DocuSign Envelope ID: 8DBEB8AA-0E8A-4E60-958F-1F24043B8B5F

I.M.T. S.r.l. - Industria Meccanica Trivelle
via D'Ancona,39 60027 Osimo (AN) Italy
Tel. +39 071 723341 - Fax +39 0717 133 352
imt@imtspa.com - www.imtspa.com

DocuSign Envelope ID: 8DBEB8AA-0E8A-4E60-958F-1F24043B8B5F

Job Number	Job Title	General Contractor	Contact Information	Township	County	State	Year	Country	Type of Work	Number of Poles	Dimensions	Contract Amount	Work Status
20-365	DCMS 27540 Stevenson Bridge	Golden Triangle	Stephen Raffa (412) 670-7028 raffa@gbrgh.com	Rankin	Allegheny	PA	2020	1st	Temporary Trebucks for Shoring work	5	8	$ 77,801.47	Complete
20-330	United Hospital Center - East Addition	Mark Landau Company	Douglas Bonnerman (412) 725-1616 dbonnerman@landau.bldg.com	Bridgeport	Harrison	WV	2020	4th	201 High Cantilever Temporary Shoring	92	30 and 8	$ 592,831.00	Complete
21-101	Locust Grove WWTP	Belt Companies	Jared Burkett (301) 729-8800 jburkett@kbcbuildgroup.com	Leiterfy	Cumberland	MD	2021	1st	Temp Shoring - Micropile SB / Strand TB / Rock Anchors	171	7 / 6 / 4	$ 600,000.00	Ongoing
21-111	ABL - Potomac Side	Hartshop Bowman / ABL Construction	Rodney Evans (304) 369-1510 rodney.evans@ablconstructionco.com	Keyser	Mineral	WV	2021	1st	Permanent Trebucks for Shoring Work	46	6	$ 301,102.00	Ongoing
21-119	Fallowfield Avenue Slope Repair	Independent Enterprises	Jonathan Hoffman (402) 215-3435 Ext 254 jonathan@ieinet.co	Beechview	Allegheny	PA	2021	1st	Permanent Wall Bracketing and Trebucks	10 / 10	16 and 6	$ 301,000.00	Ongoing
21-124	PSU Core Signature Development	Jill Kindorff / Amerson	Justin Stoner (814) 233-1586 jstoner@amersonconstruction.com	State College	Centre	PA	2020	1st	Temp Shoring - Micropile Soldier Beams / Strand Trebucks	100	9.625 and 7	$ 1,105,000.00	Ongoing
21-129	Aspen Heights - West College Dorms	Paula Anderson / Amerson	Justin Stoner (814) 233-1585 jstoner@amersonconstruction.com	State College	Centre	PA	2021	4th	Temp Shoring and Micropile Foundations	210	9.625 and 7	$ 400,536.00	Ongoing

DocuSign Envelope ID: 8DBEB8AA-0E8A-4E60-958F-1F24043B8B5F

IRON EAGLE
EXCAVATING

11. Construction Experience

Schedule B – Previous Experience

Name of Project: Butter Road Culvert Replacement
Location of Project: Dover, PA
Prime
Summary of Work Completes: Road culvert replacement
Contract Value: $92,000
Name of Owner for Project: Conewago Township
Date of start: June 2018
Date of Complete: August 2018
Reference- Name: Todd Smith
Phone Number: 717-534-8556

Name of Project: Tallmadge Drive Sewer line replacement
Location of Project: West Chester, PA
Prime
Summary of Work Completes: Sewer line replacement
Contract Value: $84,961.50
Name of Owner for Project: East Goshan Township
Date of start: November 2018
Date of Complete: March 2019
Reference- Name: Mark Miller
Phone Number: 610-692-7171

Name of Project: PennDot Vehicle Wash
Location of Project: Harrisburg, PA
Subcontractor
Summary of Work Completes: Full Site excavation package and Utilities
Contract Value: $225,180
Name of Owner for Project: PennDot,
Date of start: June 2018
Date of Complete: April 2019
Reference- Name: Bill Witmer
Phone Number: 717-979-4309

Name of Project: Magisterial Justice Office
Location of Project: Harrisburg, PA
Subcontractor
Summary of Work Completes: Full site excavation package including utilities
Contract Value: $265,000
Name of Owner for Project: State of Pennsylvania
Date of start: August 2019

DocuSign Envelope ID: 8DBEB8AA-0E8A-4E60-958F-1F24043B8B5F

IRON EAGLE
EXCAVATING

Date of Complete: February 2020
Reference- Name: Jeff Ulm
Phone Number: 717-319-4364

Name or Project: Rutters Gas Station
Location of Project: Spring Grove, PA
Subcontractor
Summary of Work Completes: Full site excavation package including utilities
Contract Value: $70,000
Name of Owner for Project: Rutters
Date of start: January 2019
Date of Complete: June 2019
Reference- Name: Jeff Ulm
Phone Number: 717-319-4364

Name of Project: Wildcat Highschool
Location of Project: Mechanicsburg, PA
Subcontractor
Summary of Work Completes: Full site excavation package including utilities
Contract Value: $225,000
Name of Owner for Project: Wildcat Highschool
Date of start: November 2018
Date of Complete: October 2019
Reference- Name: Brian Imler
Phone Number: 717-814-2723

Name of Project: Pennsylvania Farmshow Loading Dock
Location of Project: Harrisburg, PA
Subcontractor
Summary of Work Completes: Excavation and site stormwater
Contract Value: $145,000
Name of Owner for Project: State of Pennsylvania
Date of start: August 2019
Date of Complete: November 2019
Reference- Name: Matt Hartman
Phone Number: 717-668-5438

Name or Project: Penn State University, York – Graham Center
Location of Project: York, PA
Subcontractor
Summary of Work Completes: Full site excavation package including utilities
Contract Value: $215,000

DocuSign Envelope ID: 8DBEB8AA-0E8A-4E60-958F-1F24043B8B5F

IRON EAGLE
EXCAVATING

Name of Owner for Project: PSU, York
Date of start: June 2019
Date of Complete: February 2020
Reference- Name: Phil Crothamel
Phone Number: 717-432-9728

Name or Project: Grace Lutheran
Location of Project: Lancaster, PA
Subcontractor
Summary of Work Completes: Full site excavation package including utilities
Contract Value: $85,000
Name of Owner for Project: Grace Lutheran Church
Date of start: July 2019
Date of Complete: June 2020
Reference- Name: Alex
Phone Number: 717-572-4726

Name or Project: Ag Salt
Location of Project: Gettysburg, PA
Subcontractor
Summary of Work Completes: Storm, Sewer, Water Lines
Contract Value: $125,000
Name of Owner for Project: Ag Salt
Date of start: 2017
Date of Complete: 2017
Reference Name: Dalin
Phone Number: 717-479-2946

Name or Project: Royal Farms Store #266
Location of Project: Middleriver, MD
Subcontractor
Summary of Work Completes: Storm, Sewer, Water Lines, footing, gas, electric
Contract Value: $900,000
Name of Owner for Project: Royal Farms
Date of start: November 2019
Date of Complete: July 2020
Reference Name:
Phone Number:

Name or Project: UPS Carlisle
Location of Project: Carlisle, PA
Subcontractor

DocuSign Envelope ID: 8DBEB8AA-0E8A-4E60-958F-1F24043B8B5F

IRON EAGLE
EXCAVATING

Summary of Work Completes: Storm, Sewer, Water Lines, footing
Contract Value: $176,000
Name of Owner for Project: UPS
Date of start: December 2019
Date of Complete: November 2020
Reference Name: Dan Shaffer
Phone Number: 717-357-8539

Name or Project: Mifflin County Annex
Location of Project: Louistown. PA
Subcontractor
Summary of Work Completes: Stormwater Installation, Sewer Lines, Building Footing,
Contract Value: $189,000
Name of Owner for Project: Mifflin County
Date of start: September 2020
Date of Complete: May 2021
Reference Name: Ralph
Phone Number: 717-659-3636

Schedule A – Current Experience

Name or Project: Broad Street Elementary
Location of Project: Mechanicsburg, PA
Subcontractor
Summary of Work Completes: Storm, Sewer, Water Lines, footing, gas, electric
Contract Value: $580,000
Name of Owner for Project: Mechanicsburg School District
Date of start: April 2020
Date of Complete: Current
Reference Name: Brad Weigle
Phone Number: 717-979-5235

Name or Project: Middletown Train Station
Location of Project: Middletown, PA
Subcontractor
Summary of Work Completes: Storm, Water Lines, Footing,
Contract Value: $400,000
Name of Owner for Project: Amtrack
Date of start: June 2020
Date of Complete: Current
Reference Name: Ron Stiger
Phone Number: 717-740-0430

DocuSign Envelope ID: 8DBEB8AA-0E8A-4E60-958F-1F24043B8B5F

IRON EAGLE
EXCAVATING

Name or Project: Coplay Borough Utility Garage
Location of Project: Coplay, PA
Subcontractor
Summary of Work Completes: Storm, Water Lines, Footing,
Contract Value: $295,000
Name of Owner for Project:
Date of start: September 2020
Date of Complete: Current
Reference Name:
Phone Number:

Name or Project: Parkland Bus Loop
Location of Project: Orefield, PA
Subcontractor
Summary of Work Completes: Water Main and Sewer Main Installation
Contract Value: $284,000
Name of Owner for Project: Parkland School District
Date of start: August 2021
Date of Complete: Current
Reference Name:
Phone Number:

Name or Project: Gettysburg Montessori
Location of Project: Gettysburg, PA
Subcontractor
Summary of Work Completes: Building Addition Excavation, Stormwater and Utility Excavation
Contract Value: $235,000
Name of Owner for Project: Gettysburg Montessori Charter School
Date of start: October 2020
Date of Complete: Current
Reference Name:
Phone Number:

Name or Project: Ephrata High School Addition
Location of Project: Ephrata, PA
Subcontractor
Summary of Work Completes: Building addition excavation, New Tennis Court Excavation, Stormwater and Utility Excavation.
Contract Value: $630,000
Name of Owner for Project: Ephrata Highschool
Date of start: June 2021

DocuSign Envelope ID: 8DBEB8AA-0E8A-4E60-958F-1F24043B8B5F

IRON EAGLE
EXCAVATING

Date of Complete: Current
Reference Name:
Phone Number:

Name or Project: Awbury View Apartment Renovations
Location of Project: West German Town Philadelphia, PA
Subcontractor
Summary of Work Completes: Large Block Retaining Wall Installation
Contract Value: $235,000
Name of Owner for Project: Awbury View Apartment
Date of start: September 2021
Date of Complete: Current
Reference Name:
Phone Number:

Name or Project: Hampstead Sewer Plant
Location of Project: Hampstead, MD
Subcontractor
Summary of Work Completes: New Sewer Plant Installation
Contract Value: $330,000
Name of Owner for Project: Hampstead Township
Date of start: December 2020
Date of Complete: Current
Reference Name:
Phone Number:

Name or Project: Chesapeake City Waste Water Treatment Plant
Location of Project: Chesapeake City, MD
Subcontractor
Summary of Work Completes: Building Excavation and Utility Installation
Contract Value: $525,000
Name of Owner for Project: Chesapeake City Township
Date of start: March 2021
Date of Complete: Current
Reference Name:
Phone Number:

Name or Project: Harrisburg Military Readiness Center
Location of Project: Harrisburg, PA
Subcontractor
Summary of Work Completes: Building Excavation, Utility and Stormwater Excavation, and Prepping or new Parking lot
Contract Value: $700,000

DocuSign Envelope ID: 8DBEB8AA-0E8A-4E60-958F-1F24043B8B5F

IRON EAGLE
EXCAVATING

Name of Owner for Project: DGS
Date of start: May 2021
Date of Complete: Current
Reference Name:
Phone Number:

Name or Project: Shrewsbury Municipal Building
Location of Project: Shrewsbury, PA
Subcontractor
Summary of Work Completes: New Building Installation and Utilities and Stormwater Installation
Contract Value: $815,500
Name of Owner for Project: Shrewsbury Township
Date of start: September 2021
Date of Complete: Current
Reference Name:
Phone Number:

DocuSign Envelope ID: 8DBEB8AA-0E8A-4E60-958F-1F24043B8B5F

IRON EAGLE
EXCAVATING

3) Construction Equipment List

- 1999 GMC (Single Axle)
- 2004 Western Star (Tri-Axle)
- 2002 Chevy C6500 Dump Truck
- 2000 Case 821C Wheel Loader
- (2) Trench Roller
- 1986 Dynapac CA15D Roller
- 1996 Case 621 Roller
- 2009 Komatsu D39 Dozer
- 2015 Komatsu D61 I Dozer
- 2018 Kubota SVL95 Skidloader
- 2019 Kubota SVL95 Skidloader
- 2020 Cat 299 D Skidloader
- 2008 Case CX225 Excavator
- 2006 Komatsu PC138 Excavator
- 2012 Case CX80 Excavator
- 2018 Kubota KX 080 Excavator
- 2021 Kubota KX 080 Excavator
- 2014 Case CX 160 Excavator
- Volvo 305 Excavator
- Case 135 Excavator
- Cat Craw Loader 953

DocuSign Envelope ID: 8DBEB8AA-0E8A-4E60-958F-1F24043B8B5F

DocuSign Envelope ID: 8C8829B7-93A5-40A2-9DFD-ACDCBCE2BFC5

NON-COLLUSION AFFIDAVIT OF PRIME BIDDER

State of Pennsylvania

County of Berks

James P. Radwanski, being first duly sworn, deposes and says that:

He/She is Owner (Owner, Partner, Officer, Representative or Agent) of Perrotto Builders, Ltd., the Bidder that has submitted the attached Bid or Bids;

He/She is fully informed respecting the preparation and contents of the attached Bid and of all pertinent circumstances respecting such Bid;

Such Bid is genuine and is not a collusive or sham Bid;

Neither the said Bidder nor any of its officers;
partners, owners, agents, representatives, employees or parties in interest, including this affiant, has in any way colluded, conspired, connived or agreed, directly or indirectly, with any other Bidder, firm or person to submit a collusive or sham Bid in connection with the Contract for which the attached Bid has been submitted or to refrain from bidding in connection with such Contract, or has in any manner, directly or indirectly, sought by agreement or collusion or communication of conference with any other Bidder, firm or person to fix the price or prices in the attached Bid or of any other Bidder, or to fix any overheld, profit or cost element of the Bid price or the Bid price of any other Bidder, or to secure through any collusion, conspiracy, connivance or unlawful agreement any advantage against the City of Reading or any person interested in the proposed Contract;

The price or prices quoted in the attached Bid are fair and proper and are not tainted by any collusion, conspiracy, connivance or unlawful agreement on the part of the Bidder or any of its agents, representatives, owners, employees, or parties in interest, including this affiant; and,

Neither the said Bidder nor any of its officers, partners, owners, agents or parties in interest, have any interest, present or prospective, that can be reasonably construed to result in a conflict of interest between them and the City of Reading, which the Bidder will be required to perform.

DocuSign Envelope ID: 8DBEB8AA-0E8A-4E60-958F-1F24043B8B5F

DocuSign Envelope ID: 8C8829B7-93A5-40A2-9DFD-ACDCBCE2BFC5

I state that Perrotto Builders, Ltd understands
(Name of Firm)
and acknowledges that the above representations are material and important, and will be relied on by the City of Reading in awarding the contract(s) for which this bid is submitted. I understand and my firm understands that any misstatement in this affidavit is and shall be treated as fraudulent concealment from the City of Reading of the true facts relating to the submission of bids for this contract.

(Name and Company Position)
James P. Radwanski, Owner/President

SWORN TO AND SUBSCRIBED
BEFORE ME THIS 9
DAY OF Sept, 2021

Notary Public My Commission Expires

Commonwealth of Pennsylvania - Notary Seal
Francine D. Norris, Notary Public
Berks County
My commission expires July 22, 2025
Commission number 1216632
Member, Pennsylvania Association of Notaries

DocuSign Envelope ID: 8DBEB8AA-0E8A-4E60-958F-1F24043B8B5F

DocuSign Envelope ID: 8C8829B7-93A5-40A2-9DFD-ACDCBCE2BFC5

PROVIDER'S CERTIFICATION OF NON-INDEBTEDNESS
TO THE CITY OF READING

Provider hereby certifies and represents that Provider and Provider's parent company(ies) and subsidiary(ies) are not currently indebted to the City of Reading (the "City"), and will not at any time during the term of this Contract (including any extensions or renewals thereof) be indebted to the City, for or on account of any delinquent taxes, liens, judgments, fees or other debts for which no written agreement or payment plan satisfactory to the City has been established. In addition to any other rights or remedies available to the City at law or in equity, Provider acknowledges that any breach or failure to conform to this certification may, at the option of the City, result in the withholding of payments otherwise due to Provider and, if such breach or failure is not resolved to the City's satisfaction within a reasonable timeframe specified by the City in writing, may result in the offset of any such indebtedness against said payments and/or the termination of this Contract for default (in which case Provider shall be liable for all excess costs and other damages resulting from the termination).

Perrotto Builders, Ltd.
NAME OF PROVIDER

By: _____
AUTHORIZED SIGNATORY
James P. Radwanski

Title: President
PRESIDENT OR VICE PRESIDENT

Attest: Francine D. Norris
Francine D Norris

DocuSign Envelope ID: 8DBEB8AA-0E8A-4E60-958F-1F24043B8B5F

DocuSign Envelope ID: 8C8829B7-93A5-40A2-9DFD-ACDCBCE2BFC5

RESOLUTION NO. 192-92

WHEREAS, reportedly, twenty-five cement manufacturing facilities in the United States are currently burning well over two billion pounds a year of hazardous waste as a source of fuel and additional profit in the cement manufacturing process; and

WHEREAS, approximately twenty cement manufacturing facilities are seeking permission to start this practice; and

WHEREAS, sufficient data and evidence as to the safety of cement products made from hazardous waste has not been proven; and

WHEREAS, it is in the best interest of the citizens of the City of Reading in regard to their health and quality of life that cement derived from hazardous waste be banned from any City projects.

NOW, THEREFORE, the Council of the City of Reading resolves that the City of Reading will not purchase cement from any facility that burns hazardous waste as fuel in its manufacturing process, nor allow the use of concrete made from this type of cement. This policy shall be reflected in city bid specifications.

PASSED COUNCIL April 1, 1993

WARREN H. HAGGERTY, JR.
Mayor

ATTEST:

RUTH M. THOMPSON
City Clerk

DocuSign Envelope ID: 8DBEB8AA-0E8A-4E60-958F-1F24043B8B5F

DocuSign Envelope ID: 8C8829B7-93A5-40A2-9DFD-ACDCBCE2BFC5

STATEMENT REGARDING MANUFACTURE OF CEMENT

The following statement is to be signed by an authorized officer of the company.

The undersigned contractor hereby certifies in accordance with City of Reading Resolution #192-92, that any cement used in performance of this contract shall not have been manufactured by a process using hazardous materials, as defined by the Environmental Protection Agency, in the manufacture and makeup thereof.

CONTRACTOR Perrotto Builders, Ltd.

By: _____
James P. Redwanski

Title: President/Owner

ATTEST:

Francine D. Norris

Francine D. Norris

DocuSign Envelope ID: 8DBEB8AA-0E8A-4E60-958F-1F24043B8B5F

DocuSign Envelope ID: 8C8829B7-93A5-40A2-9DFD-ACDCBCE2BFC5

CONTRACTOR'S STATEMENT FOR PUBLIC DISCLOSURE *

1. a/ Name of Contractor: Perrotto Builders, Ltd.

   b/ Address and Zip Code of Contractor: 426 Warren St/Reading, PA 19601

2. If the Contractor is not an individual doing business under his own name, the Contractor has the status indicated below and is organized or operating under the laws of Pennsylvania

   X a corporation

   _____ a partnership known as:

   _____ a business association or a joint venture known as:

   _____ a Federal, State or Local government or instrumentality thereof

   _____ other (explain)

3. If the Contractor is not an individual or a government agency or instrumentality, give date of organization: 1981

4. Names, addresses, title of position (if any), and nature and extent of the interest of the officers and principal members, shareholders, investors other than a government agency or instrumentality, are set forth as follows:

   a/ If the Contractor is a corporation, the officers, directors, trustees, and each stockholder owning more than 10% of any share of stock. James P. Radwanski, Owner/President; Mohnton, PA; 100%

   b/ If the Contractor is a partnership, each partner, whether a general or limited partner, and either the percent of interest or a description of the character and extent of interest.

   c/ If the Contractor is a business association or a joint venture, each participant and either the percent of interest or a description of the character and extent of interest.

   d/ If the Contractor is some other entity, the officers, the members of the governing body, and each person having an interest of more than 10%.

* If space on this form is inadequate for any requested information, this should be furnished on an attached page which is referred to under the appropriate numbered item on the form.

DocuSign Envelope ID: 8DBEB8AA-0E8A-4E60-958F-1F24043B8B5F

DocuSign Envelope ID: 8C8829B7-93A5-40A2-9DFD-ACDCBCE2BFC5

NAME, ADDRESS & ZIP CODE	POSITION TITLE (if any) AND PERCENT OF INTEREST OR DESCRIPTION OF CHARACTER AND EXTENT OF INTEREST

5. Name, address and nature and extent of interest of each person or entity (not named in response to Item 4) who has a beneficial interest in any of the shareholders or investors named in response to Item 5 which gives such person or entity more than a computed 10% interest in the Contractor (for example, more than 20% of the stock in a corporation which holds 50% of the stock of the Contractor, or more than 50% of the stock in a corporation which holds 20% of the stock of the Contractor).

N/A

NAME, ADDRESS & ZIP CODE	DESCRIPTION OF CHARACTER AND EXTENT OF INTEREST

6. Names (if not given above) of officers and directors or trustees of any corporation or firm listed under Item 4 or Item 5 above: N/A

7. Is the Contractor a subsidiary of or affiliated with any other corporation or any other firm or firms? ___ YES ___ NO. If yes, list each such corporation or firm by name and address, specify its relationship to the Contractor, and identify the officers and directors or trustees common to the Contractor and such other corporation or firm:

8. Other federal grant projects under Title I of the Housing and Community Development Act of 1974 (CP.L.93-383), as amended, in which the Contractor or any of the principals of the Contractor is or has been the contractor, or a stock-holder, officer, director or trustee, or partner of such a contractor: N/A

9. If the Contractor or a parent corporation, a subsidiary, an affiliate or a principal of the Contractor is to participate in the work or services as a Subcontractor or consultant:

   a/ Name and address of such Subcontractor or consultant: N/A

   b/ Has such Subcontractor within the last 10 years ever failed to qualify as a responsible bidder, refused to enter into a contract after an award has been made, or failed to complete a contract?
   ___YES X NO. If yes, explain:

DocuSign Envelope ID: 8DBEB8AA-0E8A-4E60-958F-1F24043B8B5F

DocuSign Envelope ID: 8C8829B7-93A5-40A2-9DFD-ACDCBCE2BFC5

c/ Outstanding contract bids of such Subcontractor or consultant: N/A

Awarding Agency	Amount	Date Opened
	$	

10. Brief statement respecting equipment, experience, financial capacity, and other resources available to such Subcontractor or consultant for the performance of the work or services involved in the contract, specifying particularly the qualifications of the personnel, the nature of the equipment, and the general experience of the Subcontractor or consultant.

11. a/ Does any member of the governing body or employee of the Local Public Agency or any officer or employee of the Local Public Agency who exercises any functions or responsibilities in connection with the awarding and/or carrying out of the contract have any direct or indirect personal interest in the Contractor or in the Contractor's performance under the contract? ___YES X NO. If yes, explain:

b/ Does any member of the governing body of the locality in which the Public Improvement Project is situated or any other public official of the locality, who exercises any functions or responsibilities in the review or approval of the awarding and/or carrying out of the contract have any direct or indirect personal interest in the Contractor or in the Contractor's performance under the contract? ___YES X NO. If yes, explain:

DocuSign Envelope ID: 8DBEB8AA-0E8A-4E60-958F-1F24043B8B5F

DocuSign Envelope ID: 8C8829B7-93A5-40A2-9DFD-ACDCBCE2BFC5

CERTIFICATION

I (We) Percotto Builders, Ltd certify that this Contractor's Statement for Public Disclosure is true and correct to the best of my (our) knowledge and beliefs.

DATED: 9/9/21

(SIGNATURE)

James P. Radwanski, President
(TITLE)

426 Warren St / Reading Pa 19601
(ADDRESS & ZIP CODE)

DATED: _____

(SIGNATURE)

(TITLE)

(ADDRESS & ZIP CODE)

1 - If the Contractor is an individual, this Statement should be signed by such individual; if a partnership, by one of the partners; if a corporation or other entity, by one of its chief officers having knowledge of the facts required by this Statement.

2 - Penalty For False Certification: Section 1001, Title 18, of the U.S.C. provides a fine of not more than $10,000, or imprisonment of not more than five years, or both, for knowingly and willfully making or using any false writing or document, knowing the same to contain any false, fictitious or fraudulent statement or entry in a matter within the jurisdiction of any Department of the United States.

DocuSign Envelope ID: 8DBEB8AA-0E8A-4E60-958F-1F24043B8B5F

DocuSign Envelope ID: 8C8829B7-93A5-40A2-9DFD-ACDCBCE2BFC5

EHD
1857 William Penn Way
PO Box 11600
Lancaster, PA 17601

717.394.5681 or
800.544.7292
(F) 717.394.0842
ehd-ins.com

EHD | a trusted partner for 125 YEARS

Consent of Surety

The City of Reading
815 Washington Street
Reading, PA 19601

RE: Perrotto Builders, Ltd
New Fire Station @ 9th & Marion Streets,
1201 North 9th Street, Reading, PA 19604

To Whom It May Concern:

We are pleased to be the surety agent for the above-referenced contractor. In the event this firm enters into a contract with you for this project, Travelers Casualty and Surety Company of America is prepared to execute the required Performance and Payment bonds in the full amount of the contract.

Signed and Sealed Date: 8/24/2021

Travelers Casualty and Surety Company of America

Morgan S. Ellis
Attorney-In-Fact

DocuSign Envelope ID: 8DBEB8AA-0E8A-4E60-958F-1F24043B8B5F

DocuSign Envelope ID: 8C8829B7-93A5-40A2-9DFD-ACDCBCE2BFC5

TRAVELERS	Travelers Casualty and Surety Company of America Travelers Casualty and Surety Company St. Paul Fire and Marine Insurance Company

POWER OF ATTORNEY

KNOW ALL MEN BY THESE PRESENTS: That Travelers Casualty and Surety Company of America, Travelers Casualty and Surety Company, and St. Paul Fire and Marine Insurance Company are corporations duly organized under the laws of the State of Connecticut (herein collectively called the "Companies"), and that the Companies do hereby make, constitute and appoint **MORGAN S ELLIS** of **LANCASTER**, **Pennsylvania**, their true and lawful Attorney-in-Fact to sign, execute, seal and acknowledge any and all bonds, recognizances, conditional undertakings and other writings obligatory in the nature thereof on behalf of the Companies in their business of guaranteeing the fidelity of persons, guaranteeing the performance of contracts and executing or guaranteeing bonds and undertakings required or permitted in any actions or proceedings allowed by law.

IN WITNESS WHEREOF, the Companies have caused this instrument to be signed, and their corporate seals to be hereto affixed, this **17th** day of **January, 2019.**

State of Connecticut

City of Hartford ss.

By: _____
Robert L. Raney, Senior Vice President

On this the **17th** day of **January, 2019**, before me personally appeared **Robert L. Raney**, who acknowledged himself to be the Senior Vice President of Travelers Casualty and Surety Company of America, Travelers Casualty and Surety Company, and St. Paul Fire and Marine Insurance Company, and that he, as such, being authorized so to do, executed the foregoing instrument for the purposes therein contained by signing on behalf of said Companies by himself as a duly authorized officer.

IN WITNESS WHEREOF, I hereunto set my hand and official seal.

My Commission expires the **30th** day of **June, 2021**

_____
Anna P. Nowik, Notary Public

This Power of Attorney is granted under and by the authority of the following resolutions adopted by the Boards of Directors of Travelers Casualty and Surety Company of America, Travelers Casualty and Surety Company, and St. Paul Fire and Marine Insurance Company, which resolutions are now in full force and effect, reading as follows:

RESOLVED, that the Chairman, the President, any Vice Chairman, any Executive Vice President, any Senior Vice President, any Vice President, any Second Vice President, the Treasurer, any Assistant Treasurer, the Corporate Secretary or any Assistant Secretary may appoint Attorneys-in-Fact and Agents to act for and on behalf of the Company and may give such appointee such authority as his or her certificate of authority may prescribe to sign with the Company's name and seal with the Company's seal bonds, recognizances, contracts of indemnity, and other writings obligatory in the nature of a bond, recognizance, or conditional undertaking, and any of said officers or the Board of Directors at any time may remove any such appointee and revoke the power given him or her; and it is

FURTHER RESOLVED, that the Chairman, the President, any Vice Chairman, any Executive Vice President, any Senior Vice President or any Vice President may delegate all or any part of the foregoing authority to one or more officers or employees of this Company, provided that each such delegation is in writing and a copy thereof is filed in the office of the Secretary; and it is

FURTHER RESOLVED, that any bond, recognizance, contract of indemnity, or writing obligatory in the nature of a bond, recognizance, or conditional undertaking shall be valid and binding upon the Company when (a) signed by the President, any Vice Chairman, any Executive Vice President, any Senior Vice President or any Vice President, any Second Vice President, the Treasurer, any Assistant Treasurer, the Corporate Secretary or any Assistant Secretary and duly attested and sealed with the Company's seal by a Secretary or Assistant Secretary; or (b) duly executed (under seal, if required) by one or more Attorneys-in-Fact and Agents pursuant to the power prescribed in his or her certificate or their certificates of authority or by one or more Company officers pursuant to a written delegation of authority; and it is

FURTHER RESOLVED, that the signature of each of the following officers: President, any Executive Vice President, any Senior Vice President, any Vice President, any Assistant Vice President, any Secretary, any Assistant Secretary, and the seal of the Company may be affixed by facsimile to any Power of Attorney or to any certificate relating thereto appointing Resident Vice Presidents, Resident Assistant Secretaries or Attorneys-in-Fact for purposes only of executing and attesting bonds and undertakings and other writings obligatory in the nature thereof, and any such Power of Attorney or certificate bearing such facsimile signature or facsimile seal shall be valid and binding upon the Company and any such power so executed and certified by such facsimile signature and facsimile seal shall be valid and binding on the Company in the future with respect to any bond or understanding to which it is attached.

I, **Kevin E. Hughes**, the undersigned, Assistant Secretary of Travelers Casualty and Surety Company of America, Travelers Casualty and Surety Company, and St. Paul Fire and Marine Insurance Company, do hereby certify that the above and foregoing is a true and correct copy of the Power of Attorney executed by said Companies, which remains in full force and effect.

Dated this **24th** day of **August**, **2021**.

_____
Kevin E. Hughes, Assistant Secretary

To verify the authenticity of this Power of Attorney, please call us at 1-800-421-3880.
Please refer to the above-named Attorney-in-Fact and the details of the bond to which this Power of Attorney is attached.

DocuSign Envelope ID: 8DBEB8AA-0E8A-4E60-958F-1F24043B8B5F

DocuSign Envelope ID: 8C8829B7-93A5-40A2-9DFD-ACDCBCE2BFC5

Exhibit "B"

DocuSign Envelope ID: 8DBEB8AA-0E8A-4E60-958F-1F24043B8B5F

DocuSign Envelope ID: 8C8829B7-93A5-40A2-9DFD-ACDCBCE2BFC5

TABLE OF CONTENTS

VOLUME 1 – PROCUREMENT DOCUMENTS AND GENERAL CONDITIONS OF THE CONTRACT

DIVISION 00 - PROCUREMENT AND CONTRACTING REQUIREMENTS

00 0115 – LIST OF DRAWING SHEETS
00 1116 – INVITATION TO BID
00 2113 – INSTRUCTION TO BIDDERS
00 2113a – AIA A701 - SAMPLE
00 2213 – SUPPLEMENTAL INSTRUCTIONS TO BIDDERS
00 2313 – GENERAL CONDITIONS OF THE CONTRACT FOR CONSTRUCTION
00 2313a – AIA A232 - SAMPLE
00 2413 – SUPPLEMENTARY GENERAL CONDITIONS
00 2513 – PREBID MEETINGS
00 2600 – PROCUREMENT SUBSTITUTION PROCEDURES
00 3113 – PRELIMINARY SCHEDULE
00 3132 – GEOTECHNICAL DATA
00 3132a – GEOTECHNICAL REPORT
00 4116 – BID FORM – STIPULATED SUM (MULTI-PRIME CONTRACT)
00 4313 – BID SECURITY FORMS
00 4321 – ALLOWANCE FORM
00 4322 – UNIT PRICES FORM
00 4323 – ALTERNATES FORM
00 4373 – PROPOSED SCHEUDLE OF VALUES FORM
00 4400 – OWNERSDOCUMENTS – BID FORMS
00 4400a – OWNERS DOCUMENTS – BID FORMS – SAMPLES
00 6000 – PROJECT FORMS
00 6000a – OWNERS PROJECT FORMS

DIVISION 01 - GENERAL REQUIREMENTS

01 1000 – SUMMARY
01 1300 – CONTRACT PACKAGE REFERENCE
01 1320 – CONTRACT PACKAGE SUPPLEMENTARY INSTRUCTIONS
01 1320.1 – APPENDIX A – ALL CONTRACTORS
01 1320.2 – APPENDIX B – GENERAL CONTRACTOR
01 1320.3 – APPENDIX C – FIRE PROTECTION CONTRACTOR
01 1320.4 – APPENDIX D – PLUMBING CONTRACTOR
01 1320.5 – APPENDIX E – MECHANICAL CONTRACTOR
01 1320.6 – APPENDIX F – ELECTRICAL CONTRACTOR
01 2100 – ALLOWANCES
01 2200 – UNIT PRICES
01 2300 – ALTERNATES
01 2500 – SUBSTITUTION PROCEDURES
01 2500a – SUBSTITUTION REQUEST FORM
01 2600 – CONTRACT MODIFICATION PROCEDURES
01 2900 – PAYMENT PROCEDURES
01 3100 – PROJECT MANAGEMENT AND COORDINATION
01 3200 – CONSTRUCTION PROGRESS DOCUMENTATION
01 3233 – PHOTOGRAPHIC DOCUMENTATION
01 3300 – SUBMITTAL PROCEDURES

DocuSign Envelope ID: 8DBEB8AA-0E8A-4E60-958F-1F24043B8B5F

DocuSign Envelope ID: 8C8829B7-93A5-40A2-9DFD-ACDCBCE2BFC5

01 3300a – SUBMITTAL REVIEW AND TRASNMITTAL FORM
01 4000 – QUALITY REQUIREMENTS
01 4200 – REFERENCES
01 5000 – TEMPORARY FACILITIES AND CONTROLS
01 6000 – PRODUCT REQUIREMENTS
01 7300 – EXECUTION
01 7419 – CONSTRUCTION WASTE MANAGEMENT AND DISPOSAL
01 7700 – CLOSEOUT PROCEDURES
01 7823 – OPERATION AND MAINTENANCE DATA
01 7823a – O&M MAUAL TEMPLATE
01 7839 – PROJECT RECORD DOCUMENTS
01 7900 – DEMONSTRATION AND TRAINING

VOLUME II –SPECIFICATIONS/PROJECT MANUAL

DIVISION 02 - EXISTING CONDITIONS

02 4116 - STRUCTURE DEMOLITION

DIVISION 03 - CONCRETE

03 3000 - CAST-IN-PLACE CONCRETE
03 3300 – ARCHITECTURAL CONCRETE

DIVISION 04 – MASONRY

04 2200 - CONCRETE UNIT MASONRY
04 2613 – MASONRY VENEER

DIVISION 05 - METALS

05 1200 - STRUCTURAL STEEL FRAMING
05 1213 – ARCHITECTURALLY EXPOSED STRUCTURAL STEEL FRAMING
05 3100 - STEEL DECKING
05 4000 - COLD-FORMED METAL FRAMING
05 5000 - METAL FABRICATIONS
05 5113 - METAL PAN STAIRS
05 5213 - PIPE AND TUBE RAILINGS

DIVISION 06 - WOOD, PLASTICS, AND COMPOSITES

06 1053 - MISCELLANEOUS ROUGH CARPENTRY
06 1600 – SHEATHING
06 2023 – INTERIOR FINISH CARPENTRY
06 4116 - PLASTIC-LAMINATE-CLAD ARCHITECTURAL CABINET
06 6400 - PLASTIC PANELING

DIVISION 07 - THERMAL AND MOISTURE PROTECTION

07 1113 - BITUMINOUS DAMPPROOFING
07 1900 – WATER REPELLENTS
07 2100 - THERMAL INSULATION
07 2726 - FLUID-APPLIED MEMBRANE AIR BARRIERS

DocuSign Envelope ID: 8DBEB8AA-0E8A-4E60-958F-1F24043B8B5F

DocuSign Envelope ID: 8C8829B7-93A5-40A2-9DFD-ACDCBCE2BFC5

07 4213.13 – FORMED METAL WALL PANELS
07 4213.23 - METAL COMPOSITE MATERIAL WALL PANELS
07 4293 - SOFFIT PANELS
07 4646 - FIBER-CEMENT SIDING
07 5423 - THERMOPLASTIC-POLYOLEFIN (TPO) ROOFING
07 6200 - SHEET METAL FLASHING AND TRIM
07 7100 - ROOF SPECIALTIES
07 7200 - ROOF ACCESSORIES
07 8413 - PENETRATION FIRESTOPPING
07 9200 - JOINT SEALANTS

DIVISION 08 - OPENINGS

08 1113 - HOLLOW METAL DOORS AND FRAMES
08 1416 - FLUSH WOOD DOORS
08 3113 - ACCESS DOORS AND FRAMES
08 3323 - OVERHEAD COILING DOORS
08 3516 – FOUR FOLD DOOR SYSTEMS
08 3613 - SECTIONAL DOORS
08 4113 - ALUMINUM-FRAMED ENTRANCES AND STOREFRONTS
08 4413 - GLAZED ALUMINUM CURTAIN WALLS
08 5653 – SECURITY WINDOWS
08 7100 - DOOR HARDWARE
08 8000 – GLAZING
08 8813 - FIRE-RESISTANT GLAZING
08 9116 – OPERABLE WALL LOUVERS
08 9119 - FIXED LOUVERS

DIVISION 09 - FINISHES

09 2116.23 - GYPSUM BOARD SHAFT WALL ASSEMBLIES
09 2216 – NON-STRUCTURAL METAL FRAMING
09 2900 - GYPSUM BOARD
09 3013 - CERAMIC TILING
09 5113 - ACOUSTICAL PANEL CEILINGS
09 5436 – SUSPENDED DECORATIVE GRIDS
09 6513 - RESILIENT BASE AND ACCESSORIES
09 6519 - RESILIENT TILE FLOORING
09 6536 - STATIC-CONTROL RESILIENT FLOORING
09 6566 - RESILIENT ATHLETIC FLOORING
09 6723 - RESINOUS FLOORING
09 6813 - TILE CARPETING
09 9123 - INTERIOR PAINTING
09 9600 - HIGH-PERFORMANCE COATINGS (MPI STANDARDS)
09 9646 – INTUMESCENT PAINTING

DIVISION 10 - SPECIALTIES

10 1419 - DIMENSIONAL LETTER SIGNAGE
10 1423 - PANEL SIGNAGE
10 1423.16 – ROOM IDENTIFICATION PANEL SIGNAGE
10 2600 – WALL AND DOOR PROTECTION
10 2800 - TOILET, BATH, AND LAUNDRY ACCESSORIES

DocuSign Envelope ID: 8DBEB8AA-0E8A-4E60-958F-1F24043B8B5F

DocuSign Envelope ID: 8C8829B7-93A5-40A2-9DFD-ACDCBCE2BFC5

10 4413 - FIRE PROTECTION CABINETS
10 4416 - FIRE EXTINGUISHERS
10 5113 - METAL LOCKERS
10 5143 – WIRE MESH STORAGE LOCKERS
10 7516 - GROUND-SET FLAGPOLES

DIVISION 11 - EQUIPMENT

11 2400 – RESIDENTIAL APPLIANCES

DIVISION 12 - FURNISHINGS

12 2413 - ROLLER WINDOW SHADES
12 3661.16 - SOLID SURFACING COUNTERTOPS
12 3661.19 - QUARTZ AGGLOMERATE COUNTERTOPS

DIVISION 14 - CONVEYING EQUIPMENT

14 2400 - HYDRAULIC ELEVATORS

DIVISION 21 - FIRE SUPPRESSION

21 0500	COMMON WORK RESULTS FOR FIRE SUPPRESSION
21 0548	VIBRATION AND SEISMIC CONTROLS FOR FIRE SUPPRESSION PIPING AND EQUIPMENT
21 0553	IDENTIFICATION FOR FIRE SUPPRESSION PIPING AND EQUIPMENT
21 1300	FIRE-SUPPRESSION SPRINKLER SYSTEMS

DIVISION 22 - PLUMBING

22 0500	COMMON WORK RESULTS FOR PLUMBING
22 0516	EXPANSION FITTINGS AND LOOPS FOR PLUMBING PIPING
22 0523	GENERAL-DUTY VALVES FOR PLUMBING PIPING
22 0548	VIBRATION AND SEISMIC CONTROLS FOR PLUMBING PIPING AND EQUIPMENT
22 0553	IDENTIFICATION FOR PLUMBING PIPING AND EQUIPMENT
22 0719	PLUMBING INSULATION
22 0719.11	UNDER-LAVATORY PIPE AND SUPPLY COVERS
22 1113	FACILITY WATER DISTRIBUTION PIPING
22 1116	DOMESTIC WATER PIPING
22 1119	DOMESTIC WATER PIPING SPECIALTIES
22 1122	FACILITY NATURAL-GAS PIPING
22 1316	SANITARY WASTE AND VENT PIPING
22 1319	SANITARY WASTE PIPING SPECIALTIES
22 1320	UNDERGROUND PROTECTED STEEL GRAVITY BASED OIL/SAND INTERCEPTOR
22 3000	PLUMBING EQUIPMENT
22 4000	PLUMBING FIXTURES

DocuSign Envelope ID: 8DBEB8AA-0E8A-4E60-958F-1F24043B8B5F

DocuSign Envelope ID: 8C8829B7-93A5-40A2-9DFD-ACDCBCE2BFC5

DIVISION 23 - HEATING, VENTILATING, AND AIR-CONDITIONING (HVAC)

23 0517	SLEEVES AND SLEEVE SEALS FOR HVAC PIPING
23 0548	VIBRATION AND SEISMIC CONTROLS FOR HVAC
23 0553	IDENTIFICATION FOR HVAC PIPING AND EQUIPMENT
23 0593	TESTING, ADJUSTING, AND BALANCING FOR HVAC
23 0713	DUCT INSULATION
23 0719	HVAC PIPING INSULATION
23 0800	COMMISSIONING OF HVAC
23 2113	HYDRONIC PIPING
23 2300	REFRIGERANT PIPING
23 3100	HVAC DUCTS AND CASINGS
23 3300	AIR DUCT ACCESSORIES
23 3423	HVAC POWER VENTILATORS
23 3700	AIR OUTLETS AND INLETS
23 3810	FIRE READY HOOD
23 4000	HVAC AIR CLEANING DEVICES
23 5100	BREECHINGS, CHIMNEYS, AND STACKS
23 7499	PACKAGED DOAS WITH ENERGY RECOVERY
23 8129	VARIABLE REFRIGERANT FLOW HVAC SYSTEMS
23 8200	CONVECTION HEATING AND COOLING UNITS
23 8210	GAS-FIRED INFRARED UNIT HEATERS

DIVISION 26 - ELECTRICAL

26 0505	SELECTIVE DEMOLITION FOR ELECTRICAL
26 0519	LOW-VOLTAGE ELECTRICAL POWER CONDUCTORS AND CABLES
26 0526	GROUNDING AND BONDING FOR ELECTRICAL SYSTEMS
26 0529	HANGERS AND SUPPORTS FOR ELECTRICAL SYSTEMS
26 0533.13	CONDUIT FOR ELECTRICAL SYSTEMS
26 0533.16	BOXES FOR ELECTRICAL SYSTEMS
26 0548	VIBRATION AND SEISMIC CONTROLS FOR ELECTRICAL SYSTEMS
26 0553	IDENTIFICATION FOR ELECTRICAL SYSTEMS
26 0573	POWER SYSTEM STUDIES
26 0583	WIRING CONNECTIONS
26 0923	DISTRIBUTED DIGITAL LIGHTING CONTROL SYSTEM
26 2100	LOW-VOLTAGE ELECTRICAL SERVICE ENTRANCE
26 2416	PANELBOARDS
26 2726	WIRING DEVICES
26 2816.16	ENCLOSED SWITCHES
26 2913	ENCLOSED CONTROLLERS
26 3213	ENGINE GENERATORS
26 3600	TRANSFER SWITCHES
26 5100	INTERIOR LIGHTING
26 5600	EXTERIOR LIGHTING

DIVISION 27 - COMMUNICATIONS

27 1000	DATA & VOICE COMMUNICATIONS CABLING

DocuSign Envelope ID: 8DBEB8AA-0E8A-4E60-958F-1F24043B8B5F

DocuSign Envelope ID: 8C8829B7-93A5-40A2-9DFD-ACDCBCE2BFC5

DIVISION 28 - ELECTRONIC SAFETY AND SECURITY

28 4600 FIRE DETECTION AND ALARM

DIVISOIN 31 – EARTHWORK

31 1000 – SITE CLEARING
31 2000 – EARTHWORK
31 2316.13 – TRENCHING

DIVISION 32 – EXTERIOR IMPROVEMENTS

32 1216 – ASPHALT PAVING
32 1313 – SITE CONCRETE
32 1723 – PAVEMENT MARKINGS
32 9113 – SOIL PREPARATION
32 9200 – TURF AND GRASSES

DIVISION 33 – UTILITIES

33 0500 – COMMON WORK RESULTS FOR UTILITIES
33 4200 – STORMWATER CONVEYANCE

DIVISION 41 – MATERIAL PROCESSING AND HANDLING EQUIPMENT MANUFACTURERS

41 2200 – CRANES & HOISTS

DocuSign Envelope ID: 8DBEB8AA-0E8A-4E60-958F-1F24043B8B5F

DocuSign Envelope ID: 8C8829B7-93A5-40A2-9DFD-ACDCBCE2BFC5

Exhibit "C"

DocuSign Envelope ID: 8C8829B7-93A5-40A2-9DFD-ACDCBCE2BFC5

CONTINUATION PAGE

PROJECT: 9th & Marion Fire Station
9th & Marion Fire Station

APPLICATION #: 1
DATE OF APPLICATION: 09/15/2021
PERIOD THRU: 09/15/2021
PROJECT #s:

Payment Application containing Contractor's signature is attached.

A	B	C	D	E	F	G		H	I
			COMPLETED WORK						
ITEM #	WORK DESCRIPTION	SCHEDULED AMOUNT	AMOUNT PREVIOUS PERIODS	AMOUNT THIS PERIOD	STORED MATERIALS (NOT IN D OR E)	TOTAL COMPLETED AND STORED (D + E + F)	% COMP. (G / C)	BALANCE TO COMPLETION (C-G)	RETAINAGE (If Variable)
01	Allowance 1	$125,000.00	$0.00	$0.00	$0.00	$0.00	0%	$125,000.00	
02	Allowance 2	$20,000.00	$0.00	$0.00	$0.00	$0.00	0%	$20,000.00	
03	Allowance 3	$10,000.00	$0.00	$0.00	$0.00	$0.00	0%	$10,000.00	
04	Allowance 4	$50,000.00	$0.00	$0.00	$0.00	$0.00	0%	$50,000.00	
05	Allowance 5	$75,000.00	$0.00	$0.00	$0.00	$0.00	0%	$75,000.00	
06	Bonds & Insurance	$89,200.00	$0.00	$0.00	$0.00	$0.00	0%	$89,200.00	
07	PennBid	$5,300.00	$0.00	$0.00	$0.00	$0.00	0%	$5,300.00	
08	Fees	$2,000.00	$0.00	$0.00	$0.00	$0.00	0%	$2,000.00	
09	Spervision	$95,300.00	$0.00	$0.00	$0.00	$0.00	0%	$95,300.00	
10	Scheduling	$6,500.00	$0.00	$0.00	$0.00	$0.00	0%	$6,500.00	
11	Security	$13,000.00	$0.00	$0.00	$0.00	$0.00	0%	$13,000.00	
12	Quality Control	$2,000.00	$0.00	$0.00	$0.00	$0.00	0%	$2,000.00	
13	Temporary Facilities	$5,000.00	$0.00	$0.00	$0.00	$0.00	0%	$5,000.00	
14	Temporary Heat/Controls	$5,000.00	$0.00	$0.00	$0.00	$0.00	0%	$5,000.00	
15	Temporary Offices	$22,000.00	$0.00	$0.00	$0.00	$0.00	0%	$22,000.00	
16	Sanitary Facilities	$5,300.00	$0.00	$0.00	$0.00	$0.00	0%	$5,300.00	
	SUB-TOTALS	$530,600.00	$0.00	$0.00	$0.00	$0.00	0%	$530,600.00	

DocuSign Envelope ID: 8DBEB8AA-0E8A-4E60-958F-1F24043B8B5F

DocuSign Envelope ID: 8C8829B7-93A5-40A2-9DFD-ACDCBCE2BFC5

CONTINUATION PAGE

PROJECT: 9th & Marion Fire Station
9th & Marion Fire Station

APPLICATION #: 1
DATE OF APPLICATION: 09/15/2021
PERIOD THRU: 09/15/2021
PROJECT #s:

Payment Application containing Contractor's signature is attached.

A	B	C	D	E	F	G		H	I
			COMPLETED WORK						
ITEM #	WORK DESCRIPTION	SCHEDULED AMOUNT	AMOUNT PREVIOUS PERIODS	AMOUNT THIS PERIOD	STORED MATERIALS (NOT IN D OR E)	TOTAL COMPLETED AND STORED (D + E + F)	% COMP. (G / C)	BALANCE TO COMPLETION (C-G)	RETAINAGE (If Variable)
17	Vehicles/Fuel	$6,000.00	$0.00	$0.00	$0.00	$0.00	0%	$6,000.00	
18	Temporary Signage	$10,800.00	$0.00	$0.00	$0.00	$0.00	0%	$10,800.00	
19	Temp Protection	$12,000.00	$0.00	$0.00	$0.00	$0.00	0%	$12,000.00	
20	Temp Signage	$1,800.00	$0.00	$0.00	$0.00	$0.00	0%	$1,800.00	
21	Mobilization	$12,000.00	$0.00	$0.00	$0.00	$0.00	0%	$12,000.00	
22	Demobilization	$3,000.00	$0.00	$0.00	$0.00	$0.00	0%	$3,000.00	
23	Layout/Surveying	$10,000.00	$0.00	$0.00	$0.00	$0.00	0%	$10,000.00	
24	Progress Cleaning	$11,500.00	$0.00	$0.00	$0.00	$0.00	0%	$11,500.00	
25	Construction Dumpsters	$8,500.00	$0.00	$0.00	$0.00	$0.00	0%	$8,500.00	
26	Final Cleaning	$5,000.00	$0.00	$0.00	$0.00	$0.00	0%	$5,000.00	
27	Operation & Maintenance	$1,500.00	$0.00	$0.00	$0.00	$0.00	0%	$1,500.00	
28	Footings	$105,000.00	$0.00	$0.00	$0.00	$0.00	0%	$105,000.00	
29	Slab on Grade	$120,000.00	$0.00	$0.00	$0.00	$0.00	0%	$120,000.00	
30	Slab on Deck	$100,000.00	$0.00	$0.00	$0.00	$0.00	0%	$100,000.00	
31	Masonry Brick Materials	$41,500.00	$0.00	$0.00	$0.00	$0.00	0%	$41,500.00	
32	CMU Material	$246,500.00	$0.00	$0.00	$0.00	$0.00	0%	$246,500.00	
	SUB-TOTALS	$1,225,700.00	$0.00	$0.00	$0.00	$0.00	0%	$1,225,700.00	

DocuSign Envelope ID: 8DBEB8AA-0E8A-4E60-958F-1F24043B8B5F

DocuSign Envelope ID: 8C8829B7-93A5-40A2-9DFD-ACDCBCE2BFC5

CONTINUATION PAGE

PROJECT: 9th & Marion Fire Station
9th & Marion Fire Station

APPLICATION #: 1
DATE OF APPLICATION: 09/15/2021
PERIOD THRU: 09/15/2021
PROJECT #s:

Payment Application containing Contractor's signature is attached.

A	B	C	D	E	F	G		H	I
			COMPLETED WORK						
ITEM #	WORK DESCRIPTION	SCHEDULED AMOUNT	AMOUNT PREVIOUS PERIODS	AMOUNT THIS PERIOD	STORED MATERIALS (NOT IN D OR E)	TOTAL COMPLETED AND STORED (D + E + F)	% COMP. (G / C)	BALANCE TO COMPLETION (C-G)	RETAINAGE (If Variable)
33	Ground Face CMU	$82,000.00	$0.00	$0.00	$0.00	$0.00	0%	$82,000.00	
34	Masonry Labor	$290,000.00	$0.00	$0.00	$0.00	$0.00	0%	$290,000.00	
35	Steel Shop Drawings	$17,500.00	$0.00	$0.00	$0.00	$0.00	0%	$17,500.00	
36	Steel	$275,000.00	$0.00	$0.00	$0.00	$0.00	0%	$275,000.00	
37	Steel Fabrication/Delivery	$105,000.00	$0.00	$0.00	$0.00	$0.00	0%	$105,000.00	
38	Metal Deck	$124,500.00	$0.00	$0.00	$0.00	$0.00	0%	$124,500.00	
39	Steel Erection	$108,000.00	$0.00	$0.00	$0.00	$0.00	0%	$108,000.00	
40	Pan Stairs	$15,000.00	$0.00	$0.00	$0.00	$0.00	0%	$15,000.00	
41	Site Concrete-driveway/pads	$20,200.00	$0.00	$0.00	$0.00	$0.00	0%	$20,200.00	
42	Miscellaneous Steel	$203,000.00	$0.00	$0.00	$0.00	$0.00	0%	$203,000.00	
43	Rough Carpentry	$25,600.00	$0.00	$0.00	$0.00	$0.00	0%	$25,600.00	
44	Sheathing	$9,600.00	$0.00	$0.00	$0.00	$0.00	0%	$9,600.00	
45	Millwork, Solid Surfaces	$86,000.00	$0.00	$0.00	$0.00	$0.00	0%	$86,000.00	
46	Dampproofing	$13,700.00	$0.00	$0.00	$0.00	$0.00	0%	$13,700.00	
47	Thermal Insulation	$19,000.00	$0.00	$0.00	$0.00	$0.00	0%	$19,000.00	
48	Weather Barriers	$24,000.00	$0.00	$0.00	$0.00	$0.00	0%	$24,000.00	
	SUB-TOTALS	$2,643,800.00	$0.00	$0.00	$0.00	$0.00	0%	$2,643,800.00	

DocuSign Envelope ID: 8DBEB8AA-0E8A-4E60-958F-1F24043B8B5F

DocuSign Envelope ID: 8C8829B7-93A5-40A2-9DFD-ACDCBCE2BFC5

CONTINUATION PAGE

PROJECT: 9th & Marion Fire Station
9th & Marion Fire Station

APPLICATION #: 1
DATE OF APPLICATION: 09/15/2021
PERIOD THRU: 09/15/2021
PROJECT #s:

Payment Application containing Contractor's signature is attached.

A	B	C	D	E	F	G		H	I
			COMPLETED WORK						
ITEM #	WORK DESCRIPTION	SCHEDULED AMOUNT	AMOUNT PREVIOUS PERIODS	AMOUNT THIS PERIOD	STORED MATERIALS (NOT IN D OR E)	TOTAL COMPLETED AND STORED (D + E + F)	% COMP. (G / C)	BALANCE TO COMPLETION (C-G)	RETAINAGE (If Variable)
49	Roof Accessories	$35,000.00	$0.00	$0.00	$0.00	$0.00	0%	$35,000.00	
50	Wall Panels	$215,000.00	$0.00	$0.00	$0.00	$0.00	0%	$215,000.00	
51	Fiber Cement Siding	$49,000.00	$0.00	$0.00	$0.00	$0.00	0%	$49,000.00	
52	Roofing	$245,800.00	$0.00	$0.00	$0.00	$0.00	0%	$245,800.00	
53	Firestopping	$1,100.00	$0.00	$0.00	$0.00	$0.00	0%	$1,100.00	
54	Joint Sealants	$13,000.00	$0.00	$0.00	$0.00	$0.00	0%	$13,000.00	
55	Expansion Control	$2,900.00	$0.00	$0.00	$0.00	$0.00	0%	$2,900.00	
56	Doors, Frames & Hardware	$147,100.00	$0.00	$0.00	$0.00	$0.00	0%	$147,100.00	
57	Overhead, Coiling, 4-Fold Doors	$188,000.00	$0.00	$0.00	$0.00	$0.00	0%	$188,000.00	
58	Aluminum Entrances/Storefronts	$227,000.00	$0.00	$0.00	$0.00	$0.00	0%	$227,000.00	
59	Gypsum Board Assemblies	$240,000.00	$0.00	$0.00	$0.00	$0.00	0%	$240,000.00	
60	Ceilings	$85,000.00	$0.00	$0.00	$0.00	$0.00	0%	$85,000.00	
61	Tile	$56,500.00	$0.00	$0.00	$0.00	$0.00	0%	$56,500.00	
62	Athletic Flooring	$20,000.00	$0.00	$0.00	$0.00	$0.00	0%	$20,000.00	
63	Resilient Flooring	$50,800.00	$0.00	$0.00	$0.00	$0.00	0%	$50,800.00	
64	Resinous Flooring	$83,800.00	$0.00	$0.00	$0.00	$0.00	0%	$83,800.00	
	SUB-TOTALS	$4,303,800.00	$0.00	$0.00	$0.00	$0.00	0%	$4,303,800.00	

DocuSign Envelope ID: 8DBEB8AA-0E8A-4E60-958F-1F24043B8B5F

DocuSign Envelope ID: 8C8829B7-93A5-40A2-9DFD-ACDCBCE2BFC5

CONTINUATION PAGE

PROJECT: 9th & Marion Fire Station
9th & Marion Fire Station

APPLICATION #: 1
DATE OF APPLICATION: 09/15/2021
PERIOD THRU: 09/15/2021
PROJECT #s:

Payment Application containing Contractor's signature is attached.

A	B	C	D	E	F	G		H	I
			COMPLETED WORK						
ITEM #	WORK DESCRIPTION	SCHEDULED AMOUNT	AMOUNT PREVIOUS PERIODS	AMOUNT THIS PERIOD	STORED MATERIALS (NOT IN D OR E)	TOTAL COMPLETED AND STORED (D + E + F)	% COMP. (G / C)	BALANCE TO COMPLETION (C-G)	RETAINAGE (If Variable)
65	Painting	$89,400.00	$0.00	$0.00	$0.00	$0.00	0%	$89,400.00	
66	Signage	$68,800.00	$0.00	$0.00	$0.00	$0.00	0%	$68,800.00	
67	Wall Protection	$13,800.00	$0.00	$0.00	$0.00	$0.00	0%	$13,800.00	
68	Toilet Accessories	$6,500.00	$0.00	$0.00	$0.00	$0.00	0%	$6,500.00	
69	Fire Extinguishers/Cabinets	$3,500.00	$0.00	$0.00	$0.00	$0.00	0%	$3,500.00	
70	Metal Lockers	$14,400.00	$0.00	$0.00	$0.00	$0.00	0%	$14,400.00	
71	Fire Lockers	$34,900.00	$0.00	$0.00	$0.00	$0.00	0%	$34,900.00	
72	Miscellaneous Assemblies	$10,400.00	$0.00	$0.00	$0.00	$0.00	0%	$10,400.00	
73	Fire Poles	$15,000.00	$0.00	$0.00	$0.00	$0.00	0%	$15,000.00	
74	Flag Pole	$4,000.00	$0.00	$0.00	$0.00	$0.00	0%	$4,000.00	
75	Equipment	$12,700.00	$0.00	$0.00	$0.00	$0.00	0%	$12,700.00	
76	Misc Assemblies	$3,200.00	$0.00	$0.00	$0.00	$0.00	0%	$3,200.00	
77	Roller Shades	$21,000.00	$0.00	$0.00	$0.00	$0.00	0%	$21,000.00	
78	Elevators	$83,800.00	$0.00	$0.00	$0.00	$0.00	0%	$83,800.00	
79	Crane	$9,000.00	$0.00	$0.00	$0.00	$0.00	0%	$9,000.00	
80	Mobilization-site	$13,500.00	$0.00	$0.00	$0.00	$0.00	0%	$13,500.00	
	SUB-TOTALS	$4,707,700.00	$0.00	$0.00	$0.00	$0.00	0%	$4,707,700.00	

DocuSign Envelope ID: 8DBEB8AA-0E8A-4E60-958F-1F24043B8B5F

DocuSign Envelope ID: 8C8829B7-93A5-40A2-9DFD-ACDCBCE2BFC5

CONTINUATION PAGE

PROJECT: 9th & Marion Fire Station
9th & Marion Fire Station

APPLICATION #: 1
DATE OF APPLICATION: 09/15/2021
PERIOD THRU: 09/15/2021
PROJECT #s:

Payment Application containing Contractor's signature is attached.

A	B	C	D	E	F	G		H	I
			COMPLETED WORK						
ITEM #	WORK DESCRIPTION	SCHEDULED AMOUNT	AMOUNT PREVIOUS PERIODS	AMOUNT THIS PERIOD	STORED MATERIALS (NOT IN D OR E)	TOTAL COMPLETED AND STORED (D + E + F)	% COMP. (G / C)	BALANCE TO COMPLETION (C-G)	RETAINAGE (If Variable)
81	E & S	$22,500.00	$0.00	$0.00	$0.00	$0.00	0%	$22,500.00	
82	Demo	$10,000.00	$0.00	$0.00	$0.00	$0.00	0%	$10,000.00	
83	Soils Exc.	$149,500.00	$0.00	$0.00	$0.00	$0.00	0%	$149,500.00	
84	Soils Backfill	$180,300.00	$0.00	$0.00	$0.00	$0.00	0%	$180,300.00	
85	Building	$43,200.00	$0.00	$0.00	$0.00	$0.00	0%	$43,200.00	
86	Storm	$127,000.00	$0.00	$0.00	$0.00	$0.00	0%	$127,000.00	
87	Misc Site	$49,400.00	$0.00	$0.00	$0.00	$0.00	0%	$49,400.00	
88	Shoring Materials	$235,000.00	$0.00	$0.00	$0.00	$0.00	0%	$235,000.00	
89	Shoring Labor	$174,000.00	$0.00	$0.00	$0.00	$0.00	0%	$174,000.00	
90	Shoring Equipment	$113,000.00	$0.00	$0.00	$0.00	$0.00	0%	$113,000.00	
91	Asphalt Paving/Markings/signs	$40,200.00	$0.00	$0.00	$0.00	$0.00	0%	$40,200.00	
92	Fence	$15,000.00	$0.00	$0.00	$0.00	$0.00	0%	$15,000.00	
93	Benches	$3,700.00	$0.00	$0.00	$0.00	$0.00	0%	$3,700.00	
94	Landscaping	$5,000.00	$0.00	$0.00	$0.00	$0.00	0%	$5,000.00	
95	Sidewalk	$24,500.00	$0.00	$0.00	$0.00	$0.00	0%	$24,500.00	
96	Curb	$18,800.00	$0.00	$0.00	$0.00	$0.00	0%	$18,800.00	
	SUB-TOTALS	$5,918,800.00	$0.00	$0.00	$0.00	$0.00	0%	$5,918,800.00	

DocuSign Envelope ID: 8DBEB8AA-0E8A-4E60-958F-1F24043B8B5F

DocuSign Envelope ID: 8C8829B7-93A5-40A2-9DFD-ACDCBCE2BFC5

CONTINUATION PAGE

PROJECT: 9th & Marion Fire Station
9th & Marion Fire Station

APPLICATION #: 1
DATE OF APPLICATION: 09/15/2021
PERIOD THRU: 09/15/2021
PROJECT #s:

Payment Application containing Contractor's signature is attached.

A	B	C	D	E	F	G		H	I
			COMPLETED WORK						
ITEM #	WORK DESCRIPTION	SCHEDULED AMOUNT	AMOUNT PREVIOUS PERIODS	AMOUNT THIS PERIOD	STORED MATERIALS (NOT IN D OR E)	TOTAL COMPLETED AND STORED (D + E + F)	% COMP. (G / C)	BALANCE TO COMPLETION (C-G)	RETAINAGE (If Variable)
97	Bollards	$7,200.00	$0.00	$0.00	$0.00	$0.00	0%	$7,200.00	
98	Planter/Retaining Wall	$8,500.00	$0.00	$0.00	$0.00	$0.00	0%	$8,500.00	
99	Flashing Signal	$13,500.00	$0.00	$0.00	$0.00	$0.00	0%	$13,500.00	
100	Alternate 1 add $75,000 (add to base bid if alternate is accepted)	$0.00	$0.00	$0.00	$0.00	$0.00		$0.00	
	TOTALS	$5,948,000.00	$0.00	$0.00	$0.00	$0.00	0%	$5,948,000.00	

DocuSign Envelope ID: 8DBEB8AA-0E8A-4E60-958F-1F24043B8B5F

DocuSign Envelope ID: 8DBEB8AA-0E8A-4E60-958F-1F24043B8B5F

DocuSign Envelope ID: 8C8829B7-93A5-40A2-9DFD-ACDCBCE2BFC5

Exhibit "D"

ARCHITECT DRAWING INDEX

SHEET NUMBER	SHEET NAME
GENERAL - CODE	
G001	DRAWING INDEX
G002	CODE ANALYSIS
G003	CODE ANALYSIS
G004	CODE PLAN
G005	TYPICAL ACCESSIBILITY GUIDELINES
ARCHITECTURAL - NEW WORK	
A100	ARCHITECTURAL SITE DIAGRAM
A101	SITE PLAN & DIMENSIONS DIAGRAM
A102	DEMOLITION PLAN - FIRST FLOOR
A103	DEMOLITION PLAN - BASEMENT
A104	DEMOLITION PLAN - SECOND FLOOR
A105	DEMOLITION PLAN - ROOF
A106	DEMOLITION PLAN - WEST & NORTH ELEVATION
A107	FLOOR PLAN - BASEMENT & FIRST LEVEL
A108	FLOOR PLAN - SECOND FLOOR - FIRST FLOOR
A109	FLOOR PLAN - THIRD LEVEL & SECOND FLOOR
A110	ROOF PLAN
A111	ROOF DETAILS
A112	ENLARGED PLAN - FIRST FLOOR & DETAILS
A113	ENLARGED PLAN - BASEMENT & SECOND FLOOR
A114	FIRE STATION PLAN - SECTIONS & DETAILS
A115	FIRE MECHANICAL & SECOND FLOOR
A116	SITE DETAILS
A117	SITE DETAILS
A118	SITE DETAILS
A119	BUILDING EXTERIOR
A120	BUILDING SECTIONS
A121	BUILDING SECTIONS
A122	BUILDING SECTIONS
A123	WALL SECTIONS
A124	WALL SECTIONS
A125	WALL SECTIONS
A126	WALL SECTIONS
A127	FOUNDATION DETAILS
A128	STAIR DETAILS
A129	STAIR & STANCHION DETAILS
A130	STAIR & FIRE POLE DETAILS
A131	STAIR DETAILS
A132	DOOR PLAN
A133	DOOR DETAILS
A134	DOOR DETAILS
A135	DOOR DETAILS
A136	DOOR DETAILS
A137	DOOR DETAILS
A138	DOOR DETAILS & ROOF TOP & LOFT FACILITIES
A139	DOOR DETAILS - COURTYARD
A140	DOOR HARDWARE SCHEDULE & TYPES
A141	DOOR HARDWARE
A142	DOOR HARDWARE
A143	DOOR & WINDOW DETAILS
A144	FOUNDATION/CONCRETE DOOR DETAILS
A145	CAP STONE WALL & ENTRANCEWAY STANCHIONS
A146	EXTERIOR FURNISHING DETAILS
A147	EXTERIOR FURNISHING DETAILS
A148	EXTERIOR FURNISHING DETAILS
A149	EXTERIOR FURNISHING SCHEDULE & DETAILS
A150	FLOOR SCHEDULE & DETAILS
A151	TYPICAL EQUIPMENT & SCHEDULE DETAILS
A152	FIN.FINISH PLANS & SET FURNITURE
A153	FIN.FINISH PLANS & SET FURNITURE
A154	FIN.FINISH PLANS & SET FURNITURE
A155	FIN.FINISH PLANS & SET FURNITURE

DocuSign Envelope ID: 8DBEB8AA-0E8A-4E60-958F-1F24043B8B5F

DocuSign Envelope ID: 8C8829B7-93A5-40A2-9DFD-ACDCBCE2BFC5

Exhibit "E"

DocuSign Envelope ID: 8C8829B7-93A5-40A2-9DFD-ACDCBCE2BFC5

DocuSign Envelope ID: 8DBEB8AA-0E8A-4E60-958F-1F24043B8B5F

9th and Marion Fire Station City of Reading

ID		Task Mode	Task Name	Duration	Start	Finish	Predecessors	Resource Names	% Complete
1			**9th and Marion Milestone Schedule**	**269 days**	**Fri 10/1/21**	**Wed 10/12/22**			**0%**
2			Notice to Proceed Issued	1 day	Fri 10/1/21	Fri 10/1/21			0%
3			**Site Construction**	**212 days**	**Mon 10/4/21**	**Tue 7/26/22**			**0%**
4			Mobilze and install site fence	5 days	Mon 10/4/21	Fri 10/8/21	2		0%
5			Soil & Erosion Control	5 days	Mon 10/11/21	Fri 10/15/21	4		0%
6			Shoring	15 days	Mon 10/18/21	Fri 11/5/21	5		0%
7			Cuts/Fills	8 days	Mon 11/8/21	Wed 11/17/21	6		0%
8			Underground utilities	8 days	Thu 11/18/21	Mon 11/29/21	7		0%
9			UG Storm	10 days	Thu 11/18/21	Wed 12/1/21	7		0%
10			Building pad to subgrade	5 days	Thu 12/2/21	Wed 12/8/21	9		0%
11			Curbing	10 days	Thu 5/26/22	Wed 6/8/22	78		0%
12			Parking subgrade and stone base	5 days	Thu 6/9/22	Wed 6/15/22	78,11		0%
13			Binder	2 days	Thu 6/16/22	Fri 6/17/22	12		0%
14			Sidewalks, signs, topsoil & seeding, curb replaceme	10 days	Mon 6/20/22	Fri 7/1/22	13		0%
15			Wearing course	2 days	Mon 7/4/22	Tue 7/5/22	14		0%
16			Striping, Flashing Signals, Fence	15 days	Wed 7/6/22	Tue 7/26/22	15		0%
17			**Building Construction**	**268 days**	**Mon 10/4/21**	**Wed 10/12/22**			**0%**
18			Shop Drawings and submittals	30 days	Mon 10/4/21	Fri 11/12/21	2		0%
19			Shop Drawing review	30 days	Mon 10/25/21	Fri 12/3/21	18SS+15 days		0%
20			**Stair Towers and Elevator Shaft**	**85 days**	**Thu 12/9/21**	**Wed 4/6/22**			**0%**
21			Footings/Rebar	15 days	Thu 12/9/21	Wed 12/29/21	10		0%
22			Full Height towers	40 days	Thu 12/30/21	Wed 2/23/22	21		0%
23			Metal Pan Stairs and Landings	15 days	Thu 2/24/22	Wed 3/16/22	22		0%
24			Hoist Beam	1 day	Thu 2/24/22	Thu 2/24/22	22		0%
25			Pour Stairs	5 days	Thu 3/17/22	Wed 3/23/22	23		0%
26			Rails	10 days	Thu 3/24/22	Wed 4/6/22	25		0%
27			Elevator	15 days	Fri 2/25/22	Thu 3/17/22	24		0%
28			**First Floor**	**200 days**	**Thu 1/6/22**	**Wed 10/12/22**			**0%**
29			Footings/Rebar	15 days	Thu 1/6/22	Wed 1/26/22	10,22SS+5 days		0%
30			Foundations/Piers Anchor Bolts	15 days	Thu 1/27/22	Wed 2/16/22	20SS+15 days,29		0%
31			Block bearing walls	15 days	Thu 2/3/22	Wed 2/23/22	30SS+5 days		0%
32			HSS Columns/Beams	10 days	Thu 2/24/22	Wed 3/9/22	31		0%
33			Hollow Metal Frames	5 days	Thu 2/24/22	Wed 3/2/22	31		0%
34			Under Slab Electric	10 days	Thu 2/17/22	Wed 3/2/22	30		0%
35			Under Slab Plumbing	10 days	Thu 2/17/22	Wed 3/2/22	30		0%
36			Stone slab	5 days	Thu 3/3/22	Wed 3/9/22	34,35		0%
37			VB and Rebar mats	5 days	Thu 3/10/22	Wed 3/16/22	36		0%
38			Radiant Tubing and Manifolds	10 days	Thu 3/17/22	Wed 3/30/22	37		0%
39			Form and Place Concrete slab	15 days	Thu 3/31/22	Wed 4/20/22	38		0%
40			MEP above ceiling rough-in	10 days	Thu 4/21/22	Wed 5/4/22	39		0%
41			Metal stud framing	5 days	Thu 5/5/22	Wed 5/11/22	40		0%
42			MEP In wall rough-in	10 days	Thu 5/12/22	Wed 5/25/22	41		0%
43			In wall inspection	0 days	Wed 5/25/22	Wed 5/25/22	42		0%
44			Drywall and spackling	5 days	Thu 5/26/22	Wed 6/1/22	43,76		0%
45			Ceiling grid	2 days	Thu 6/2/22	Fri 6/3/22	44		0%
46			Above ceiling inspection	0 days	Fri 6/3/22	Fri 6/3/22	45		0%

DocuSign Envelope ID: 8C8829B7-93A5-40A2-9DFD-ACDCBCE2BFC5

DocuSign Envelope ID: 8DBEB8AA-0E8A-4E60-958F-1F24043B8B5F

9th and Marion Fire Station City of Reading

ID	Task Mode	Task Name	Duration	Start	Finish	Predecessors	Resource Names	% Complete
47		Finishes	15 days	Mon 6/6/22	Fri 6/24/22	46		0%
48		MEP fixtures and trims	5 days	Mon 6/27/22	Fri 7/1/22	47		0%
49		Millwork and Client FF&E	5 days	Mon 7/4/22	Fri 7/8/22	48		0%
50		Inspections	1 day	Mon 7/11/22	Mon 7/11/22	49		0%
51		**Mezzanine**	**45 days**	**Thu 3/10/22**	**Wed 5/11/22**			**0%**
52		Metal Deck	3 days	Thu 3/10/22	Mon 3/14/22	31,32		0%
53		Slab on deck	2 days	Tue 3/15/22	Wed 3/16/22	52		0%
54		Block walls	10 days	Thu 3/10/22	Wed 3/23/22	32		0%
55		Hollow metal frames	3 days	Thu 3/17/22	Mon 3/21/22	53		0%
56		MEP Rough Ins	10 days	Thu 3/24/22	Wed 4/6/22	54		0%
57		Finishes	10 days	Thu 4/28/22	Wed 5/11/22	56,76		0%
58		**Second Floor**	**140 days**	**Thu 3/10/22**	**Wed 9/21/22**			**0%**
59		Metal Deck	5 days	Thu 3/10/22	Wed 3/16/22	32		0%
60		Slab on Deck	5 days	Thu 3/17/22	Wed 3/23/22	59		0%
61		Interior and Exterior Metal stud Framing	15 days	Thu 5/19/22	Wed 6/8/22	60,63		0%
62		Hollow metal frames	10 days	Thu 6/9/22	Wed 6/22/22	61		0%
63		MEP above ceiling rough-in	15 days	Thu 4/28/22	Wed 5/18/22	60,76		0%
64		MEP In wall rough-in	15 days	Thu 6/9/22	Wed 6/29/22	61		0%
65		In wall inspection	0 days	Wed 6/29/22	Wed 6/29/22	64		0%
66		Drywall and spackling	20 days	Thu 6/30/22	Wed 7/27/22	65		0%
67		Ceiling grid	15 days	Thu 7/28/22	Wed 8/17/22	66		0%
68		Above ceiling inspection	0 days	Wed 8/17/22	Wed 8/17/22	67,63		0%
69		Finishes	20 days	Thu 8/18/22	Wed 9/14/22	68		0%
70		MEP fixtures and trims	5 days	Thu 9/15/22	Wed 9/21/22	69		0%
71		Millwork and Client FF&E	5 days	Thu 9/15/22	Wed 9/21/22	69		0%
72		Inspections	0 days	Wed 9/21/22	Wed 9/21/22	71		0%
73		**Roof and Building Shell enclosure**	**65 days**	**Thu 3/24/22**	**Wed 6/22/22**			**0%**
74		Full Height CMU Walls	15 days	Thu 3/24/22	Wed 4/13/22	22,54		0%
75		Insulation	5 days	Thu 4/14/22	Wed 4/20/22	60,74		0%
76		TPO/Bit Mod	5 days	Thu 4/21/22	Wed 4/27/22	75		0%
77		Bathtub test Courtyard	3 days	Thu 4/28/22	Mon 5/2/22	76		0%
78		Brick Veneer	30 days	Thu 4/14/22	Wed 5/25/22	74		0%
79		Courtyard Siding	5 days	Tue 5/3/22	Mon 5/9/22	77		0%
80		Metal Wall panels	15 days	Thu 5/26/22	Wed 6/15/22	78		0%
81		Copings and Fascias	5 days	Thu 6/16/22	Wed 6/22/22	79,80		0%
82		Curtain Wall	15 days	Thu 5/26/22	Wed 6/15/22	78		0%
83		Storefronts and punched windows	5 days	Thu 5/26/22	Wed 6/1/22	78		0%
84		Overhead and folding garage doors	10 days	Thu 5/26/22	Wed 6/8/22	78		0%
85		Final cleaning and punch list	15 days	Thu 9/22/22	Wed 10/12/22	72		0%

DocuSign Envelope ID: 8DBEB8AA-0E8A-4E60-958F-1F24043B8B5F

DocuSign Envelope ID: 8C8829B7-93A5-40A2-9DFD-ACDCBCE2BFC5

Exhibit "F"

DocuSign Envelope ID: 8DBEB8AA-0E8A-4E60-958F-1F24043B8B5F

DocuSign Envelope ID: 8C8829B7-93A5-40A2-9DFD-ACDCBCE2BFC5

DOCUMENT 002413 - SUPPLEMENTARY GENERAL CONDITIONS

1.1 GENERAL CONDITIONS OF THE CONTRACT FOR CONSTRUCTION

A. General conditions of the contract for construction for Project consist of the following:

1. AIA Document A232, "General Conditions of the Contract for Construction, Construction Manager as Adviser" a copy of which is bound in this Project Manual.
2. The following Supplementary General Conditions of the Contract for Construction that modify and add to the requirements of the General Conditions of the Contract for Construction.

1.2 SUPPLEMENTARY GENERAL CONDITIONS OF THE CONTRACT FOR CONSTRUCTION, GENERAL

A. The following supplements modify AIA Document A232, "General Conditions of the Contract for Construction, Construction Manager as Adviser." Where a portion of the General Conditions of the Contract for Construction is modified or deleted by these Supplementary General Conditions of the Contract for Construction, unaltered portions of the General Conditions of the Contract for Construction shall remain in effect.

1.3 ARTICLE 3 - CONTRACTOR

A. Amend Section 3.6 Taxes to read:

1. 3.6 - Taxes: The City of Reading is tax exempt. All prices shall be quoted F.O.B. Reading PA destination.

B. Amend 3.7 Permits, Fees, Notices, and Compliance with Laws to read:

1. 3.7 - Permits, Fees, Notices, and Compliance with Laws: Unless otherwise provided in the Contract Documents, The Contractor shall secure and pay for all required permits, fees, licenses, and inspections by government agencies necessary for proper execution and completion of the Work that are customarily secured after execution of the Contract and legally required at the time bids are received or negotiations concluded.

C. Add Section 3.7.1

DocuSign Envelope ID: 8DBEB8AA-0E8A-4E60-958F-1F24043B8B5F

DocuSign Envelope ID: 8C8829B7-93A5-40A2-9DFD-ACDCBCE2BFC5

1. 3.7.1 - The General Contractor (1A) shall be responsible for obtaining the projects approved General Building (non-trade specific) Permit. Permit fees for the permit shall not be included within the Bid. The Owner, assisted by both the Construction Manager and the Architect, shall apply for the general building (non-trade specific) permit and respond to all general building permit review comments to gain approval of the general buildign permit.

D. Amend Section 3.8.2.2

1. Delete "but not in the allowances".

1.4 ARTICLE 5 - SUBCONTRACTORS

A. Modify Section 5.2.1 as follows:

1. Replace "as soon as practicable after award of the Contract," with "within 48 hours after Bid acceptance,".

1.5 ARCTILE 8 - TIME

A. Add Section 8.1.1.1

1. 8.1.1.1 - Contractors shall include within their schedules anticipated weather/precipitation days per month as calculated utilizing NOAA Comparative Climatic Data Mean Number of Days with Precipitation 0.01 Inch or More. This information below is adjusted to remove, based on a percentage of weekend calendar days, the anticipated weather/precipitation days; January- 8, February-7, March-8, April-8, May-8, June-8, July-7, August-7, September-6, October-6, November-7, December-8. Extensions of time based upon weather delays shall only be considered where the cumulative number of weather/precipitation days indicated above is exceeded per annum.

B. Add Section 8.3.4

DocuSign Envelope ID: 8DBEB8AA-0E8A-4E60-958F-1F24043B8B5F

DocuSign Envelope ID: 8C8829B7-93A5-40A2-9DFD-ACDCBCE2BFC5

1. 8.3.4 - Where the Contractor has not completed the work within the stipulated contract time including extensions of time granted and agreed upon by the Owner and the Contractor, the Owner shall assess liquidated damages against the Contractor for which the Contractor shall be liable for and responsible to pay to the Owner either by Contract adjustment or by direct payment to the Owner. Liquidated damages shall be assessed at $1000.00 per day for every calendar day the work is not complete beyond the scheduled date of final completion.

1.6 ARTICLE 9 - PAYMENTS AND COMPLETION

A. Replace Section 9.3.1 with the following:

1. 9.3.1 - On the 25th day of each month, the Contractor shall submit to the Construction Manager an itemized pencil copy of the Application for Payment prepared in accordance with the schedule of values for completed portions of the Work and projecting Work up to the 1st day of the following month. The Construction Manager shall review the pencil copy and provide comments to the Contractor. The Contractor shall adjust the Application for Payment based upon the Construction Manager's comments and submit a notarized Application for Payment to Construction Manager. The notarized Application for Payment shall be submitted with Certified Payroll documentation.

B. Modify Section 9.6.1 as follows:

1. Replace "and within the time provided in the Contract Documents," with "provided within the Contract Documents and within 40 days,"

C. Add Section 9.11 - Retainage

D. Add Section 9.11.1

1. 9.11.1 - Each application for payment for each Contractor shall include the retainage of ten (10) percent of the requested payment. Upon completion of Fifty (50) percent of the Contract Work of each prime contract as determined by the Construction Manager, the Construction Manager may reduce the retainage from ten (10) percent down to five (5) percent for the remainder of the contract time. The reduction of retainage is not guaranteed.

E. Add Section 9.11.2

DocuSign Envelope ID: 8DBEB8AA-0E8A-4E60-958F-1F24043B8B5F

DocuSign Envelope ID: 8C8829B7-93A5-40A2-9DFD-ACDCBCE2BFC5

1. 9.11.2 - Retainage MAY be reduced after Substantial Completion to an amount determined by the Construction Manager, Architect and Owner and only where the completion of the punchlist work is progressing to the satisfaction of the Construction Manager, Architect and Owner. Reduction of retainage is not guaranteed.

F. Add Section 9.11.3

1. 9.11.3 - Final release of retainage for each Prime Contract respectively will not be approved until after Final Completion of the Work has been achieved by each Prime Contractor respectively. Final Completion of the Work shall include but is not limited to the submission and approval of all O&M manuals and other closeout documents and all punchlist items have been completed and accepted.

1.7 **END OF DOCUMENT 002213**

DocuSign Envelope ID: 8DBEB8AA-0E8A-4E60-958F-1F24043B8B5F

DocuSign Envelope ID: 8C8829B7-93A5-40A2-9DFD-ACDCBCE2BFC5

Exhibit "G"

DocuSign Envelope ID: 8DBEB8AA-0E8A-4E60-958F-1F24043B8B5F

DocuSign Envelope ID: 8C8829B7-93A5-40A2-9DFD-ACDCBCE2BFC5

PERRBUI-01 JRSTANSBERRY

ACORD

CERTIFICATE OF LIABILITY INSURANCE

DATE (MM/DD/YYYY) 10/6/2021

THIS CERTIFICATE IS ISSUED AS A MATTER OF INFORMATION ONLY AND CONFERS NO RIGHTS UPON THE CERTIFICATE HOLDER. THIS CERTIFICATE DOES NOT AFFIRMATIVELY OR NEGATIVELY AMEND, EXTEND OR ALTER THE COVERAGE AFFORDED BY THE POLICIES BELOW. THIS CERTIFICATE OF INSURANCE DOES NOT CONSTITUTE A CONTRACT BETWEEN THE ISSUING INSURER(S), AUTHORIZED REPRESENTATIVE OR PRODUCER, AND THE CERTIFICATE HOLDER.

IMPORTANT: If the certificate holder is an ADDITIONAL INSURED, the policy(ies) must have ADDITIONAL INSURED provisions or be endorsed. If SUBROGATION IS WAIVED, subject to the terms and conditions of the policy, certain policies may require an endorsement. A statement on this certificate does not confer rights to the certificate holder in lieu of such endorsement(s).

PRODUCER
EHD (Engle-Hambright & Davies, Inc.)
One Meridian Blvd
Suite 4A01
Wyomissing, PA 19610

CONTACT NAME: Jennifer R. Stansberry
PHONE (A/C, No, Ext): (610) 374-4893 FAX (A/C, No): (610) 374-5612
E-MAIL ADDRESS: jrstansberry@ehd-ins.com

INSURER(S) AFFORDING COVERAGE	NAIC #
INSURER A : Cincinnati Casualty Company	28665
INSURER B : Selective Way Insurance Company	26301
INSURER C : Eastern Alliance Insurance Company	10724
INSURER D : Greenwich Insurance Company	22322
INSURER E :	
INSURER F :	

INSURED
Perrotto Builders, Ltd
426 Warren Street
Reading, PA 19601

COVERAGES CERTIFICATE NUMBER: REVISION NUMBER:

THIS IS TO CERTIFY THAT THE POLICIES OF INSURANCE LISTED BELOW HAVE BEEN ISSUED TO THE INSURED NAMED ABOVE FOR THE POLICY PERIOD INDICATED. NOTWITHSTANDING ANY REQUIREMENT, TERM OR CONDITION OF ANY CONTRACT OR OTHER DOCUMENT WITH RESPECT TO WHICH THIS CERTIFICATE MAY BE ISSUED OR MAY PERTAIN, THE INSURANCE AFFORDED BY THE POLICIES DESCRIBED HEREIN IS SUBJECT TO ALL THE TERMS, EXCLUSIONS AND CONDITIONS OF SUCH POLICIES. LIMITS SHOWN MAY HAVE BEEN REDUCED BY PAID CLAIMS.

INSR LTR	TYPE OF INSURANCE	ADDL INSD	SUBR WVD	POLICY NUMBER	POLICY EFF (MM/DD/YYYY)	POLICY EXP (MM/DD/YYYY)	LIMITS	
A	X COMMERCIAL GENERAL LIABILITY						EACH OCCURRENCE	$ 1,000,000
	CLAIMS-MADE / X OCCUR	X	X	EPP 0391790	7/1/2021	7/1/2022	DAMAGE TO RENTED PREMISES (Ea occurrence)	$ 500,000
							MED EXP (Any one person)	$ 10,000
							PERSONAL & ADV INJURY	$ 1,000,000
	GEN'L AGGREGATE LIMIT APPLIES PER:						GENERAL AGGREGATE	$ 2,000,000
	POLICY X / PRO-JECT / LOC						PRODUCTS - COMP/OP AGG	$ 2,000,000
	OTHER:							$
B	AUTOMOBILE LIABILITY						COMBINED SINGLE LIMIT (Ea accident)	$ 1,000,000
	ANY AUTO	X	X	S 2357572	7/1/2021	7/1/2022	BODILY INJURY (Per person)	$
	OWNED AUTOS ONLY / X SCHEDULED AUTOS						BODILY INJURY (Per accident)	$
	X HIRED AUTOS ONLY / X NON-OWNED AUTOS ONLY						PROPERTY DAMAGE (Per accident)	$
								$
A	X UMBRELLA LIAB / X OCCUR						EACH OCCURRENCE	$ 10,000,000
	EXCESS LIAB / CLAIMS-MADE	X	X	EPP 0391790	7/1/2021	7/1/2022	AGGREGATE	$ 10,000,000
	DED / X RETENTION $ 0							$
C	WORKERS COMPENSATION AND EMPLOYERS' LIABILITY						X PER STATUTE / OTH-ER	
	ANY PROPRIETOR/PARTNER/EXECUTIVE OFFICER/MEMBER EXCLUDED? (Mandatory in NH) Y/N N	N / A	X	0000044680	7/1/2021	7/1/2022	E.L. EACH ACCIDENT	$ 1,000,000
	If yes, describe under DESCRIPTION OF OPERATIONS below						E.L. DISEASE - EA EMPLOYEE	$ 1,000,000
							E.L. DISEASE - POLICY LIMIT	$ 1,000,000
D	Professional			PEC005242303	7/1/2021	7/1/2022	Aggregate	2,000,000

DESCRIPTION OF OPERATIONS / LOCATIONS / VEHICLES (ACORD 101, Additional Remarks Schedule, may be attached if more space is required)
City of Reading, Manns Woodward Architects, and Boyle Construction Inc. are noted as an Additional Insured on a primary and non-contributory basis on the General Liability, Automobile, and Umbrella policies only if required by written contract and to the extent required by written contract, subject to policy terms, conditions, limitations, and exclusions. Waiver of subrogation applies to the General Liability, Business Automobile, and Umbrella policies only if required by written contract subject to the policy terms, conditions, limitations, and exclusions and permitted by state law.

CERTIFICATE HOLDER

City of Reading
815 Washington Street
Reading, PA 19601

CANCELLATION

SHOULD ANY OF THE ABOVE DESCRIBED POLICIES BE CANCELLED BEFORE THE EXPIRATION DATE THEREOF, NOTICE WILL BE DELIVERED IN ACCORDANCE WITH THE POLICY PROVISIONS.

AUTHORIZED REPRESENTATIVE

© 1988-2015 ACORD CORPORATION. All rights reserved.
The ACORD name and logo are registered marks of ACORD

DocuSign Envelope ID: 8DBEB8AA-0E8A-4E60-958F-1F24043B8B5F

DocuSign Envelope ID: 8C8829B7-93A5-40A2-9DFD-ACDCBCE2BFC5

Exhibit "H"

DocuSign Envelope ID: 8DBEB8AA-0E8A-4E60-958F-1F24043B8B5F

DocuSign Envelope ID: 8C8829B7-93A5-40A2-9DFD-ACDCBCE2BFC5

RECEIVED
OCT 01 2021
By

Bond No. 107481796

AIA® Document A312™ – 2010

Payment Bond

CONTRACTOR:
(Name, legal status and address)

Perrotto Builders, Ltd.
426 Warren Street
Reading, PA 19601-1611

SURETY:
(Name, legal status and principal place of business)

Travelers Casualty and Surety Company of America
ONE TOWER SQUARE, HARTFORD, CT 06183

OWNER:
(Name, legal status and address)

The City of Reading
815 Washington Street
Reading, PA 19601

CONSTRUCTION CONTRACT
Date: September 28th, 2021
Amount: $ five million nine hundred forty eight hundred thousand and 00/100 ($5,948,000)
Description:
(Name and location)

9th & Marion Fire Station - General Construction

BCI Project #2010 52

BOND
Date: September 29th, 2021
(Not earlier than Construction Contract Date)

Amount: $ five million nine hundred forty eight hundred thousand and 00/100 ($5,948,000)
Modifications to this Bond: [x] None [ ] See Section 18

ADDITIONS AND DELETIONS:
The author of this document has added information needed for its completion. The author may also have revised the text of the original AIA standard form. An *Additions and Deletions Report* that notes added information as well as revisions to the standard form text is available from the author and should be reviewed. A vertical line in the left margin of this document indicates where the author has added necessary information and where the author has added to or deleted from the original AIA text.

This document has important legal consequences. Consultation with an attorney is encouraged with respect to its completion or modification.

Any singular reference to Contractor, Surety, Owner or other party shall be considered plural where applicable.

CONTRACTOR AS PRINCIPAL
Company: *(Corporate Seal)*
Perrotto Builders, Ltd.

Signature:
Name and Title: James P. Radwanski Owner

SURETY
Company: *(Corporate Seal)*
Travelers Casualty and Surety Company of America

Signature:
Name and Title: Benjamin R. Pinkerton, Attorney-in-fact

(Any additional signatures appear on the last page of this Payment Bond.)

(FOR INFORMATION ONLY — Name, address and telephone)

AGENT or BROKER:

Engle-Hambright & Davies, Inc.
P.O. Box 11600
Lancaster, PA 17605
(717) 394-5681

OWNER'S REPRESENTATIVE:
(Architect, Engineer or other party:)

AIA Document A312™ – 2010 Payment Bond. The American Institute of Architects. All rights reserved. WARNING: This AIA® Document is protected by U.S. Copyright Law and International Treaties. Unauthorized reproduction or distribution of this AIA® Document, or any portion of it, may result in severe civil and criminal penalties, and will be prosecuted to the maximum extent possible under the law. This document was produced by AIA software at 11:43:03 on 10/09/2012 under Order No 5820952305_1 which expires on 04/13/2013, and is not for resale.
User Notes: (1710896249)

Init.
/

DocuSign Envelope ID: 8DBEB8AA-0E8A-4E60-958F-1F24043B8B5F

DocuSign Envelope ID: 8C8829B7-93A5-40A2-9DFD-ACDCBCE2BFC5

§ 1 The Contractor and Surety, jointly and severally, bind themselves, their heirs, executors, administrators, successors and assigns to the Owner to pay for labor, materials and equipment furnished for use in the performance of the Construction Contract, which is incorporated herein by reference, subject to the following terms.

§ 2 If the Contractor promptly makes payment of all sums due to Claimants, and defends, indemnifies and holds harmless the Owner from claims, demands, liens or suits by any person or entity seeking payment for labor, materials or equipment furnished for use in the performance of the Construction Contract, then the Surety and the Contractor shall have no obligation under this Bond.

§ 3 If there is no Owner Default under the Construction Contract, the Surety's obligation to the Owner under this Bond shall arise after the Owner has promptly notified the Contractor and the Surety (at the address described in Section 13) of claims, demands, liens or suits against the Owner or the Owner's property by any person or entity seeking payment for labor, materials or equipment furnished for use in the performance of the Construction Contract and tendered defense of such claims, demands, liens or suits to the Contractor and the Surety.

§ 4 When the Owner has satisfied the conditions in Section 3, the Surety shall promptly and at the Surety's expense defend, indemnify and hold harmless the Owner against a duly tendered claim, demand, lien or suit.

§ 5 The Surety's obligations to a Claimant under this Bond shall arise after the following:

§ 5.1 Claimants, who do not have a direct contract with the Contractor,

.1 have furnished a written notice of non-payment to the Contractor, stating with substantial accuracy the amount claimed and the name of the party to whom the materials were, or equipment was, furnished or supplied or for whom the labor was done or performed, within ninety (90) days after having last performed labor or last furnished materials or equipment included in the Claim; and

.2 have sent a Claim to the Surety (at the address described in Section 13).

§ 5.2 Claimants, who are employed by or have a direct contract with the Contractor, have sent a Claim to the Surety (at the address described in Section 13).

§ 6 If a notice of non-payment required by Section 5.1.1 is given by the Owner to the Contractor, that is sufficient to satisfy a Claimant's obligation to furnish a written notice of non-payment under Section 5.1.1.

§ 7 When a Claimant has satisfied the conditions of Sections 5.1 or 5.2, whichever is applicable, the Surety shall promptly and at the Surety's expense take the following actions:

§ 7.1 Send an answer to the Claimant, with a copy to the Owner, within sixty (60) days after receipt of the Claim, stating the amounts that are undisputed and the basis for challenging any amounts that are disputed; and

§ 7.2 Pay or arrange for payment of any undisputed amounts.

§ 7.3 The Surety's failure to discharge its obligations under Section 7.1 or Section 7.2 shall not be deemed to constitute a waiver of defenses the Surety or Contractor may have or acquire as to a Claim, except as to undisputed amounts for which the Surety and Claimant have reached agreement. If, however, the Surety fails to discharge its obligations under Section 7.1 or Section 7.2, the Surety shall indemnify the Claimant for the reasonable attorney's fees the Claimant incurs thereafter to recover any sums found to be due and owing to the Claimant.

§ 8 The Surety's total obligation shall not exceed the amount of this Bond, plus the amount of reasonable attorney's fees provided under Section 7.3, and the amount of this Bond shall be credited for any payments made in good faith by the Surety.

§ 9 Amounts owed by the Owner to the Contractor under the Construction Contract shall be used for the performance of the Construction Contract and to satisfy claims, if any, under any construction performance bond. By the Contractor furnishing and the Owner accepting this Bond, they agree that all funds earned by the Contractor in the performance of the Construction Contract are dedicated to satisfy obligations of the Contractor and Surety under this Bond, subject to the Owner's priority to use the funds for the completion of the work.

DocuSign Envelope ID: 8DBEB8AA-0E8A-4E60-958F-1F24043B8B5F

DocuSign Envelope ID: 8C8829B7-93A5-40A2-9DFD-ACDCBCE2BFC5

§ 10 The Surety shall not be liable to the Owner, Claimants or others for obligations of the Contractor that are unrelated to the Construction Contract. The Owner shall not be liable for the payment of any costs or expenses of any Claimant under this Bond, and shall have under this Bond no obligation to make payments to, or give notice on behalf of, Claimants or otherwise have any obligations to Claimants under this Bond.

§ 11 The Surety hereby waives notice of any change, including changes of time, to the Construction Contract or to related subcontracts, purchase orders and other obligations.

§ 12 No suit or action shall be commenced by a Claimant under this Bond other than in a court of competent jurisdiction in the state in which the project that is the subject of the Construction Contract is located or after the expiration of one year from the date (1) on which the Claimant sent a Claim to the Surety pursuant to Section 5.1.2 or 5.2, or (2) on which the last labor or service was performed by anyone or the last materials or equipment were furnished by anyone under the Construction Contract, whichever of (1) or (2) first occurs. If the provisions of this Paragraph are void or prohibited by law, the minimum period of limitation available to sureties as a defense in the jurisdiction of the suit shall be applicable.

§ 13 Notice and Claims to the Surety, the Owner or the Contractor shall be mailed or delivered to the address shown on the page on which their signature appears. Actual receipt of notice or Claims, however accomplished, shall be sufficient compliance as of the date received.

§ 14 When this Bond has been furnished to comply with a statutory or other legal requirement in the location where the construction was to be performed, any provision in this Bond conflicting with said statutory or legal requirement shall be deemed deleted herefrom and provisions conforming to such statutory or other legal requirement shall be deemed incorporated herein. When so furnished, the intent is that this Bond shall be construed as a statutory bond and not as a common law bond.

§ 15 Upon request by any person or entity appearing to be a potential beneficiary of this Bond, the Contractor and Owner shall promptly furnish a copy of this Bond or shall permit a copy to be made.

§ 16 Definitions

§ 16.1 Claim. A written statement by the Claimant including at a minimum:

- .1 the name of the Claimant;
- .2 the name of the person for whom the labor was done, or materials or equipment furnished;
- .3 a copy of the agreement or purchase order pursuant to which labor, materials or equipment was furnished for use in the performance of the Construction Contract;
- .4 a brief description of the labor, materials or equipment furnished;
- .5 the date on which the Claimant last performed labor or last furnished materials or equipment for use in the performance of the Construction Contract;
- .6 the total amount earned by the Claimant for labor, materials or equipment furnished as of the date of the Claim;
- .7 the total amount of previous payments received by the Claimant; and
- .8 the total amount due and unpaid to the Claimant for labor, materials or equipment furnished as of the date of the Claim.

§ 16.2 Claimant. An individual or entity having a direct contract with the Contractor or with a subcontractor of the Contractor to furnish labor, materials or equipment for use in the performance of the Construction Contract. The term Claimant also includes any individual or entity that has rightfully asserted a claim under an applicable mechanic's lien or similar statute against the real property upon which the Project is located. The intent of this Bond shall be to include without limitation in the terms "labor, materials or equipment" that part of water, gas, power, light, heat, oil, gasoline, telephone service or rental equipment used in the Construction Contract, architectural and engineering services required for performance of the work of the Contractor and the Contractor's subcontractors, and all other items for which a mechanic's lien may be asserted in the jurisdiction where the labor, materials or equipment were furnished.

§ 16.3 Construction Contract. The agreement between the Owner and Contractor identified on the cover page, including all Contract Documents and all changes made to the agreement and the Contract Documents.

AIA Document A312™ – 2010 Payment Bond. The American Institute of Architects. All rights reserved. WARNING: This AIA® Document is protected by U.S. Copyright Law and International Treaties. Unauthorized reproduction or distribution of this AIA® Document, or any portion of it, may result in severe civil and criminal penalties, and will be prosecuted to the maximum extent possible under the law. This document was produced by AIA software at 11:43:03 on 10/09/2012 under Order No.5020952305_1 which expires on 04/13/2013, and is not for resale.
User Notes: (1718895249)

DocuSign Envelope ID: 8DBEB8AA-0E8A-4E60-958F-1F24043B8B5F

DocuSign Envelope ID: 8C8829B7-93A5-40A2-9DFD-ACDCBCE2BFC5

§ **16.4 Owner Default.** Failure of the Owner, which has not been remedied or waived, to pay the Contractor as required under the Construction Contract or to perform and complete or comply with the other material terms of the Construction Contract.

§ **16.5 Contract Documents.** All the documents that comprise the agreement between the Owner and Contractor.

§ **17** If this Bond is issued for an agreement between a Contractor and subcontractor, the term Contractor in this Bond shall be deemed to be Subcontractor and the term Owner shall be deemed to be Contractor.

§ **18** Modifications to this bond are as follows: None

(Space is provided below for additional signatures of added parties, other than those appearing on the cover page.)

CONTRACTOR AS PRINCIPAL		**SURETY**	
Company:	*(Corporate Seal)*	Company:	*(Corporate Seal)*
Signature:		Signature:	
Name and Title:		Name and Title:	
Address:		Address:	

Init.

AIA Document A312™ – 2010 Payment Bond. The American Institute of Architects. All rights reserved. WARNING: This AIA® Document is protected by U.S. Copyright Law and International Treaties. Unauthorized reproduction or distribution of this AIA® Document, or any portion of it, may result in severe civil and criminal penalties, and will be prosecuted to the maximum extent possible under the law. This document was produced by AIA software at 11:43:03 on 10/09/2012 under Order No.5820952305_1 which expires on 04/13/2013, and is not for resale.
User Notes: (1718896249)

DocuSign Envelope ID: 8DBEB8AA-0E8A-4E60-958F-1F24043B8B5F

DocuSign Envelope ID: 8C8829B7-93A5-40A2-9DFD-ACDCBCE2BFC5

TRAVELERS

Travelers Casualty and Surety Company of America
Travelers Casualty and Surety Company
St. Paul Fire and Marine Insurance Company

POWER OF ATTORNEY

KNOW ALL MEN BY THESE PRESENTS: That Travelers Casualty and Surety Company of America, Travelers Casualty and Surety Company, and St. Paul Fire and Marine Insurance Company are corporations duly organized under the laws of the State of Connecticut (herein collectively called the "Companies"), and that the Companies do hereby make, constitute and appoint **BENJAMIN R PINKERTON** of **LANCASTER**, **Pennsylvania**, their true and lawful Attorney(s)-in-Fact to sign, execute, seal and acknowledge any and all bonds, recognizances, conditional undertakings and other writings obligatory in the nature thereof on behalf of the Companies in their business of guaranteeing the fidelity of persons, guaranteeing the performance of contracts and executing or guaranteeing bonds and undertakings required or permitted in any actions or proceedings allowed by law.

IN WITNESS WHEREOF, the Companies have caused this instrument to be signed, and their corporate seals to be hereto affixed, this **21st** day of **April, 2021**.

State of Connecticut

By: _____
Robert L. Raney, Senior Vice President

City of Hartford ss.

On this the **21st** day of **April, 2021**, before me personally appeared **Robert L. Raney**, who acknowledged himself to be the Senior Vice President of each of the Companies, and that he, as such, being authorized so to do, executed the foregoing instrument for the purposes therein contained by signing on behalf of said Companies by himself as a duly authorized officer.

IN WITNESS WHEREOF, I hereunto set my hand and official seal.

My Commission expires the **30th** day of **June, 2026**

_____
Anna P. Nowik, Notary Public

This Power of Attorney is granted under and by the authority of the following resolutions adopted by the Boards of Directors of each of the Companies, which resolutions are now in full force and effect, reading as follows:

RESOLVED, that the Chairman, the President, any Vice Chairman, any Executive Vice President, any Senior Vice President, any Vice President, any Second Vice President, the Treasurer, any Assistant Treasurer, the Corporate Secretary or any Assistant Secretary may appoint Attorneys-in-Fact and Agents to act for and on behalf of the Company and may give such appointee such authority as his or her certificate of authority may prescribe to sign with the Company's name and seal with the Company's seal bonds, recognizances, contracts of indemnity, and other writings obligatory in the nature of a bond, recognizance, or conditional undertaking, and any of said officers or the Board of Directors at any time may remove any such appointee and revoke the power given him or her; and it is

FURTHER RESOLVED, that the Chairman, the President, any Vice Chairman, any Executive Vice President, any Senior Vice President or any Vice President may delegate all or any part of the foregoing authority to one or more officers or employees of this Company, provided that each such delegation is in writing and a copy thereof is filed in the office of the Secretary; and it is

FURTHER RESOLVED, that any bond, recognizance, contract of indemnity, or writing obligatory in the nature of a bond, recognizance, or conditional undertaking shall be valid and binding upon the Company when (a) signed by the President, any Vice Chairman, any Executive Vice President, any Senior Vice President or any Vice President, any Second Vice President, the Treasurer, any Assistant Treasurer, the Corporate Secretary or any Assistant Secretary and duly attested and sealed with the Company's seal by a Secretary or Assistant Secretary; or (b) duly executed (under seal, if required) by one or more Attorneys-in-Fact and Agents pursuant to the power prescribed in his or her certificate or their certificates of authority or by one or more Company officers pursuant to a written delegation of authority; and it is

FURTHER RESOLVED, that the signature of each of the following officers: President, any Executive Vice President, any Senior Vice President, any Vice President, any Assistant Vice President, any Secretary, any Assistant Secretary, and the seal of the Company may be affixed by facsimile to any Power of Attorney or to any certificate relating thereto appointing Resident Vice Presidents, Resident Assistant Secretaries or Attorneys-in-Fact for purposes only of executing and attesting bonds and undertakings and other writings obligatory in the nature thereof, and any such Power of Attorney or certificate bearing such facsimile signature or facsimile seal shall be valid and binding upon the Company and any such power so executed and certified by such facsimile signature and facsimile seal shall be valid and binding on the Company in the future with respect to any bond or understanding to which it is attached.

I, **Kevin E. Hughes**, the undersigned, Assistant Secretary of each of the Companies, do hereby certify that the above and foregoing is a true and correct copy of the Power of Attorney executed by said Companies, which remains in full force and effect.

Dated this **29th** day of **September**, **2021**.

_____
Kevin E. Hughes, Assistant Secretary

To verify the authenticity of this Power of Attorney, please call us at 1-800-421-3880.
Please refer to the above-named Attorney(s)-in-Fact and the details of the bond to which this Power of Attorney is attached.

DocuSign Envelope ID: 8DBEB8AA-0E8A-4E60-958F-1F24043B8B5F

DocuSign Envelope ID: 8C8829B7-93A5-40A2-9DFD-ACDCBCE2BFC5

RECEIVED
OCT 01 2021
By

Bond No. 107481796

AIA® Document A312™ – 2010

Performance Bond

CONTRACTOR:
(Name, legal status and address)
Perrotto Builders, Ltd.
426 Warren Street
Reading, PA 19601-1611

SURETY:
(Name, legal status and principal place of business)
Travelers Casualty and Surety Company of America
ONE TOWER SQUARE, HARTFORD, CT 06183

OWNER:
(Name, legal status and address)
The City of Reading
815 Washington Street
Reading, PA 19601

CONSTRUCTION CONTRACT
Date: September 28th, 2021
Amount: $ five million nine hundred forty eight hundred thousand and 00/100 ($5,948,000)
Description:
(Name and location)
9th & Marion Fire Station - General Construction

BCI Project #2010 52

BOND
Date: September 29th, 2021
(Not earlier than Construction Contract Date)

Amount: $five million nine hundred forty eight hundred thousand and 00/100 ($5,948,000)
Modifications to this Bond: [x] None [ ] See Section 16

CONTRACTOR AS PRINCIPAL
Company: *(Corporate Seal)*
Perrotto Builders, Ltd.

Signature:
Name and Title: James P. Kadwanski Owner

SURETY
Company: *(Corporate Seal)*
Travelers Casualty and Surety Company of America

Signature:
Name and Title: Benjamin R. Pinkerton, Attorney-in-fact

(Any additional signatures appear on the last page of this Performance Bond.)

(FOR INFORMATION ONLY — Name, address and telephone)

AGENT or BROKER:
Engle-Hambright & Davies, Inc.
P.O. Box 11600
Lancaster, PA 17605
(717) 394-5681

OWNER'S REPRESENTATIVE:
(Architect, Engineer or other party:)

ADDITIONS AND DELETIONS:
The author of this document has added information needed for its completion. The author may also have revised the text of the original AIA standard form. An *Additions and Deletions Report* that notes added information as well as revisions to the standard form text is available from the author and should be reviewed. A vertical line in the left margin of this document indicates where the author has added necessary information and where the author has added to or deleted from the original AIA text.

This document has important legal consequences. Consultation with an attorney is encouraged with respect to its completion or modification.

Any singular reference to Contractor, Surety, Owner or other party shall be considered plural where applicable.

DocuSign Envelope ID: 8DBEB8AA-0E8A-4E60-958F-1F24043B8B5F

DocuSign Envelope ID: 8C8829B7-93A5-40A2-9DFD-ACDCBCE2BFC5

§ 1 The Contractor and Surety, jointly and severally, bind themselves, their heirs, executors, administrators, successors and assigns to the Owner for the performance of the Construction Contract, which is incorporated herein by reference.

§ 2 If the Contractor performs the Construction Contract, the Surety and the Contractor shall have no obligation under this Bond, except when applicable to participate in a conference as provided in Section 3.

§ 3 If there is no Owner Default under the Construction Contract, the Surety's obligation under this Bond shall arise after

.1 the Owner first provides notice to the Contractor and the Surety that the Owner is considering declaring a Contractor Default. Such notice shall indicate whether the Owner is requesting a conference among the Owner, Contractor and Surety to discuss the Contractor's performance. If the Owner does not request a conference, the Surety may, within five (5) business days after receipt of the Owner's notice, request such a conference. If the Surety timely requests a conference, the Owner shall attend. Unless the Owner agrees otherwise, any conference requested under this Section 3.1 shall be held within ten (10) business days of the Surety's receipt of the Owner's notice. If the Owner, the Contractor and the Surety agree, the Contractor shall be allowed a reasonable time to perform the Construction Contract, but such an agreement shall not waive the Owner's right, if any, subsequently to declare a Contractor Default;

.2 the Owner declares a Contractor Default, terminates the Construction Contract and notifies the Surety; and

.3 the Owner has agreed to pay the Balance of the Contract Price in accordance with the terms of the Construction Contract to the Surety or to a contractor selected to perform the Construction Contract.

§ 4 Failure on the part of the Owner to comply with the notice requirement in Section 3.1 shall not constitute a failure to comply with a condition precedent to the Surety's obligations, or release the Surety from its obligations, except to the extent the Surety demonstrates actual prejudice.

§ 5 When the Owner has satisfied the conditions of Section 3, the Surety shall promptly and at the Surety's expense take one of the following actions:

§ 5.1 Arrange for the Contractor, with the consent of the Owner, to perform and complete the Construction Contract;

§ 5.2 Undertake to perform and complete the Construction Contract itself, through its agents or independent contractors;

§ 5.3 Obtain bids or negotiated proposals from qualified contractors acceptable to the Owner for a contract for performance and completion of the Construction Contract, arrange for a contract to be prepared for execution by the Owner and a contractor selected with the Owner's concurrence, to be secured with performance and payment bonds executed by a qualified surety equivalent to the bonds issued on the Construction Contract, and pay to the Owner the amount of damages as described in Section 7 in excess of the Balance of the Contract Price incurred by the Owner as a result of the Contractor Default; or

§ 5.4 Waive its right to perform and complete, arrange for completion, or obtain a new contractor and with reasonable promptness under the circumstances:

.1 After investigation, determine the amount for which it may be liable to the Owner and, as soon as practicable after the amount is determined, make payment to the Owner; or

.2 Deny liability in whole or in part and notify the Owner, citing the reasons for denial.

§ 6 If the Surety does not proceed as provided in Section 5 with reasonable promptness, the Surety shall be deemed to be in default on this Bond seven days after receipt of an additional written notice from the Owner to the Surety demanding that the Surety perform its obligations under this Bond, and the Owner shall be entitled to enforce any remedy available to the Owner. If the Surety proceeds as provided in Section 5.4, and the Owner refuses the payment or the Surety has denied liability, in whole or in part, without further notice the Owner shall be entitled to enforce any remedy available to the Owner.

DocuSign Envelope ID: 8DBEB8AA-0E8A-4E60-958F-1F24043B8B5F

DocuSign Envelope ID: 8C8829B7-93A5-40A2-9DFD-ACDCBCE2BFC5

§ 7 If the Surety elects to act under Section 5.1, 5.2 or 5.3, then the responsibilities of the Surety to the Owner shall not be greater than those of the Contractor under the Construction Contract, and the responsibilities of the Owner to the Surety shall not be greater than those of the Owner under the Construction Contract. Subject to the commitment by the Owner to pay the Balance of the Contract Price, the Surety is obligated, without duplication, for

.1 the responsibilities of the Contractor for correction of defective work and completion of the Construction Contract;

.2 additional legal, design professional and delay costs resulting from the Contractor's Default, and resulting from the actions or failure to act of the Surety under Section 5; and

.3 liquidated damages, or if no liquidated damages are specified in the Construction Contract, actual damages caused by delayed performance or non-performance of the Contractor.

§ 8 If the Surety elects to act under Section 5.1, 5.3 or 5.4, the Surety's liability is limited to the amount of this Bond.

§ 9 The Surety shall not be liable to the Owner or others for obligations of the Contractor that are unrelated to the Construction Contract, and the Balance of the Contract Price shall not be reduced or set off on account of any such unrelated obligations. No right of action shall accrue on this Bond to any person or entity other than the Owner or its heirs, executors, administrators, successors and assigns.

§ 10 The Surety hereby waives notice of any change, including changes of time, to the Construction Contract or to related subcontracts, purchase orders and other obligations.

§ 11 Any proceeding, legal or equitable, under this Bond may be instituted in any court of competent jurisdiction in the location in which the work or part of the work is located and shall be instituted within two years after a declaration of Contractor Default or within two years after the Contractor ceased working or within two years after the Surety refuses or fails to perform its obligations under this Bond, whichever occurs first. If the provisions of this Paragraph are void or prohibited by law, the minimum period of limitation available to sureties as a defense in the jurisdiction of the suit shall be applicable.

§ 12 Notice to the Surety, the Owner or the Contractor shall be mailed or delivered to the address shown on the page on which their signature appears.

§ 13 When this Bond has been furnished to comply with a statutory or other legal requirement in the location where the construction was to be performed, any provision in this Bond conflicting with said statutory or legal requirement shall be deemed deleted herefrom and provisions conforming to such statutory or other legal requirement shall be deemed incorporated herein. When so furnished, the intent is that this Bond shall be construed as a statutory bond and not as a common law bond.

§ 14 Definitions

§ 14.1 Balance of the Contract Price. The total amount payable by the Owner to the Contractor under the Construction Contract after all proper adjustments have been made, including allowance to the Contractor of any amounts received or to be received by the Owner in settlement of insurance or other claims for damages to which the Contractor is entitled, reduced by all valid and proper payments made to or on behalf of the Contractor under the Construction Contract.

§ 14.2 Construction Contract. The agreement between the Owner and Contractor identified on the cover page, including all Contract Documents and changes made to the agreement and the Contract Documents.

§ 14.3 Contractor Default. Failure of the Contractor, which has not been remedied or waived, to perform or otherwise to comply with a material term of the Construction Contract.

§ 14.4 Owner Default. Failure of the Owner, which has not been remedied or waived, to pay the Contractor as required under the Construction Contract or to perform and complete or comply with the other material terms of the Construction Contract.

§ 14.5 Contract Documents. All the documents that comprise the agreement between the Owner and Contractor.

DocuSign Envelope ID: 8DBEB8AA-0E8A-4E60-958F-1F24043B8B5F

DocuSign Envelope ID: 8C8829B7-93A5-40A2-9DFD-ACDCBCE2BFC5

§ 15 If this Bond is issued for an agreement between a Contractor and subcontractor, the term Contractor in this Bond shall be deemed to be Subcontractor and the term Owner shall be deemed to be Contractor.

§ 16 Modifications to this bond are as follows: None

(Space is provided below for additional signatures of added parties, other than those appearing on the cover page.)

CONTRACTOR AS PRINCIPAL		**SURETY**	
Company:	*(Corporate Seal)*	Company:	*(Corporate Seal)*
Signature:		Signature:	
Name and Title:		Name and Title:	
Address:		Address:	

Init.

/

AIA Document A312™ – 2010 Performance Bond. The American Institute of Architects. All rights reserved. WARNING: This AIA® Document is protected by U.S. Copyright Law and International Treaties. Unauthorized reproduction or distribution of this AIA® Document, or any portion of it, may result in severe civil and criminal penalties, and will be prosecuted to the maximum extent possible under the law. This document was produced by AIA software at 11:49:30 on 10/09/2012 under Order No.5820952305_1 which expires on 04/13/2013, and is not for resale.
User Notes:

(1750432116)

DocuSign Envelope ID: 8DBEB8AA-0E8A-4E60-958F-1F24043B8B5F

DocuSign Envelope ID: 8C8829B7-93A5-40A2-9DFD-ACDCBCE2BFC5

TRAVELERS

Travelers Casualty and Surety Company of America
Travelers Casualty and Surety Company
St. Paul Fire and Marine Insurance Company

POWER OF ATTORNEY

KNOW ALL MEN BY THESE PRESENTS: That Travelers Casualty and Surety Company of America, Travelers Casualty and Surety Company, and St. Paul Fire and Marine Insurance Company are corporations duly organized under the laws of the State of Connecticut (herein collectively called the "Companies"), and that the Companies do hereby make, constitute and appoint **BENJAMIN R PINKERTON** of **LANCASTER** , **Pennsylvania** , their true and lawful Attorney(s)-in-Fact to sign, execute, seal and acknowledge any and all bonds, recognizances, conditional undertakings and other writings obligatory in the nature thereof on behalf of the Companies in their business of guaranteeing the fidelity of persons, guaranteeing the performance of contracts and executing or guaranteeing bonds and undertakings required or permitted in any actions or proceedings allowed by law.

IN WITNESS WHEREOF, the Companies have caused this instrument to be signed, and their corporate seals to be hereto affixed, this **21st** day of **April, 2021.**

State of Connecticut

By: _____
Robert L. Raney, Senior Vice President

City of Hartford ss.

On this the **21st** day of **April, 2021**, before me personally appeared **Robert L. Raney**, who acknowledged himself to be the Senior Vice President of each of the Companies, and that he, as such, being authorized so to do, executed the foregoing instrument for the purposes therein contained by signing on behalf of said Companies by himself as a duly authorized officer.

IN WITNESS WHEREOF, I hereunto set my hand and official seal.

My Commission expires the **30th** day of **June, 2026**

_____
Anna P. Nowik, Notary Public

This Power of Attorney is granted under and by the authority of the following resolutions adopted by the Boards of Directors of each of the Companies, which resolutions are now in full force and effect, reading as follows:

RESOLVED, that the Chairman, the President, any Vice Chairman, any Executive Vice President, any Senior Vice President, any Vice President, any Second Vice President, the Treasurer, any Assistant Treasurer, the Corporate Secretary or any Assistant Secretary may appoint Attorneys-in-Fact and Agents to act for and on behalf of the Company and may give such appointee such authority as his or her certificate of authority may prescribe to sign with the Company's name and seal with the Company's seal bonds, recognizances, contracts of indemnity, and other writings obligatory in the nature of a bond, recognizance, or conditional undertaking, and any of said officers or the Board of Directors at any time may remove any such appointee and revoke the power given him or her; and it is

FURTHER RESOLVED, that the Chairman, the President, any Vice Chairman, any Executive Vice President, any Senior Vice President or any Vice President may delegate all or any part of the foregoing authority to one or more officers or employees of this Company, provided that each such delegation is in writing and a copy thereof is filed in the office of the Secretary; and it is

FURTHER RESOLVED, that any bond, recognizance, contract of indemnity, or writing obligatory in the nature of a bond, recognizance, or conditional undertaking shall be valid and binding upon the Company when (a) signed by the President, any Vice Chairman, any Executive Vice President, any Senior Vice President or any Vice President, any Second Vice President, the Treasurer, any Assistant Treasurer, the Corporate Secretary or any Assistant Secretary and duly attested and sealed with the Company's seal by a Secretary or Assistant Secretary; or (b) duly executed (under seal, if required) by one or more Attorneys-in-Fact and Agents pursuant to the power prescribed in his or her certificate or their certificates of authority or by one or more Company officers pursuant to a written delegation of authority; and it is

FURTHER RESOLVED, that the signature of each of the following officers: President, any Executive Vice President, any Senior Vice President, any Vice President, any Assistant Vice President, any Secretary, any Assistant Secretary, and the seal of the Company may be affixed by facsimile to any Power of Attorney or to any certificate relating thereto appointing Resident Vice Presidents, Resident Assistant Secretaries or Attorneys-in-Fact for purposes only of executing and attesting bonds and undertakings and other writings obligatory in the nature thereof, and any such Power of Attorney or certificate bearing such facsimile signature or facsimile seal shall be valid and binding upon the Company and any such power so executed and certified by such facsimile signature and facsimile seal shall be valid and binding on the Company in the future with respect to any bond or understanding to which it is attached.

I, **Kevin E. Hughes**, the undersigned, Assistant Secretary of each of the Companies, do hereby certify that the above and foregoing is a true and correct copy of the Power of Attorney executed by said Companies, which remains in full force and effect.

Dated this **29th** day of **September** , **2021** .

_____
Kevin E. Hughes, Assistant Secretary

To verify the authenticity of this Power of Attorney, please call us at 1-800-421-3880.
Please refer to the above-named Attorney(s)-in-Fact and the details of the bond to which this Power of Attorney is attached.

DocuSign Envelope ID: 8DBEB8AA-0E8A-4E60-958F-1F24043B8B5F

EXHIBIT

I

DocuSign Envelope ID: 8DBEB8AA-0E8A-4E60-958F-1F24043B8B5F

Items that need to be address within the Contract:

1. Perrotto's Schedule of Values:
    a. Per the request by the Architect/CM, Perrotto was to put together a proposed schedule of values within 48 hours as a bid breakdown to assist with the evaluation of the bid. Per Section 00 4373-Proposed Schedule of Values Form and modified per Addendum # 6 per Section 01 2900-Payment Procedures 1.4.A.2 *Submit the schedule of values to Architect at the earliest possible date, but no later than seven days before the date scheduled for submittal of initial Application for Payment.* Perrotto will be updating and submitting a revised SOV and reviewed by all parties
2. Since line item 100: 99 CM Primes -99-2-S General Trades Prime Subcontract: Alternate # 1 add of $75,000 was not taken it should be removed from the SOV.
3. Within the contract there are multiple places that address the following:
    a. *A date set forth in a notice to proceed issued by the Construction Manager. Please refer to the Milestone Schedule dated 7/6/21 attached hereto as Exhibit "E" and made part of this Agreement.* Perrotto wants it noted that the dates within the Milestone Schedule will be adjusted with the actual Notice to Proceed issuance. Milestone dates will be corrected with a no cost change order to be issued with Notice to Proceed per Tony G.
4. In regard to Item #3 *"Regarding Article 3, Section 3.1 and again in Article 3, Section 3.3.2: The schedule will be revised in a change order."* and #4 *"Regarding Exhibit E, there is no need for the commentary above the schedule as this will be addressed in the same way as the previous statement."* of your email dated 11/5/21 at 3:13pm. Perrotto does not understand why a change order would be issued for any of the items marked up in the contract as we are only following the contract documents and fell a change order for these items should not be issued. Milestone dates will be corrected with a no cost change order to be issued with Notice to Proceed per Tony G.

DocuSign

Certificate Of Completion

Envelope Id: 8C8829B793A540A29DFDACDCBCE2BFC5
Subject: 2010 52 - Perrotto - Contract TG
Source Envelope:
Document Pages: 157
Certificate Pages: 1
AutoNav: Enabled
EnvelopeId Stamping: Enabled
Time Zone: (UTC-05:00) Eastern Time (US & Canada)

Signatures: 1
Initials: 0

Status: Completed

Envelope Originator:
Robert Sabol
rsabol@boyleconstruction.com
IP Address: 216.164.169.205

Record Tracking

Status: Original
11/5/2021 3:22:55 PM

Holder: Robert Sabol
rsabol@boyleconstruction.com

Location: DocuSign

Signer Events	Signature	Timestamp
Tony Ganguzza tganguzza@boyleconstruction.com Vice President Boyle Construction Security Level: Email, Account Authentication (None)	DocuSigned by: Tony Ganguzza 292D29914D83404... Signature Adoption: Pre-selected Style Using IP Address: 216.164.169.205	Sent: 11/5/2021 3:25:06 PM Viewed: 11/5/2021 3:26:34 PM Signed: 11/5/2021 3:26:40 PM

Electronic Record and Signature Disclosure:
Not Offered via DocuSign

In Person Signer Events	Signature	Timestamp

Editor Delivery Events	Status	Timestamp

Agent Delivery Events	Status	Timestamp

Intermediary Delivery Events	Status	Timestamp

Certified Delivery Events	Status	Timestamp

Carbon Copy Events	Status	Timestamp

Witness Events	Signature	Timestamp

Notary Events	Signature	Timestamp

Envelope Summary Events	Status	Timestamps
Envelope Sent	Hashed/Encrypted	11/5/2021 3:25:06 PM
Certified Delivered	Security Checked	11/5/2021 3:26:34 PM
Signing Complete	Security Checked	11/5/2021 3:26:40 PM
Completed	Security Checked	11/5/2021 3:26:40 PM

Payment Events	Status	Timestamps